Q01590-PROPOSAL DRAWING

Date: 23.03.24

TOLERANCE WILL BE AS PER BS:EN-755-9

ALLOY 6005 T6

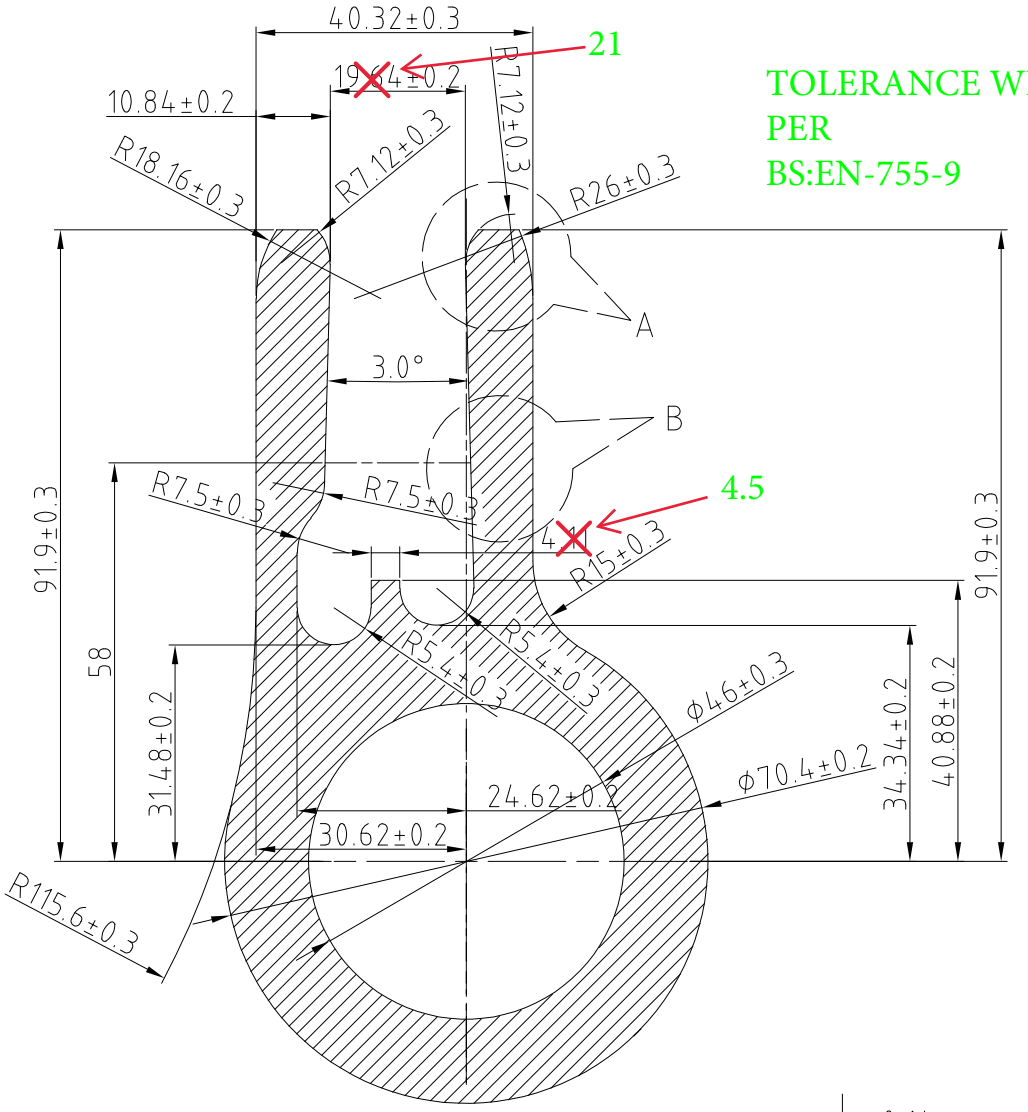

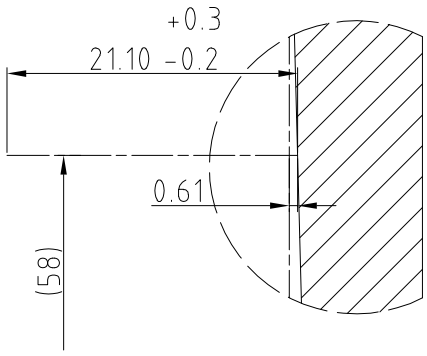

DETAIL B
SCALE 2:1

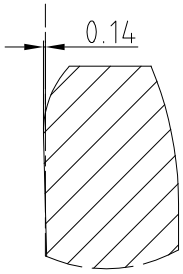

DETAIL A
SCALE 2:1

AREA	: 3449.68 mm SQ.
DRAWING	: TC-ENQ-610
REF. DRG NO.	: CM00B367950
PART NAME	: COMPONENT
MATERIAL	: ASTM B221M 6061-T6