PROPOSAL DRAWING
Q01604

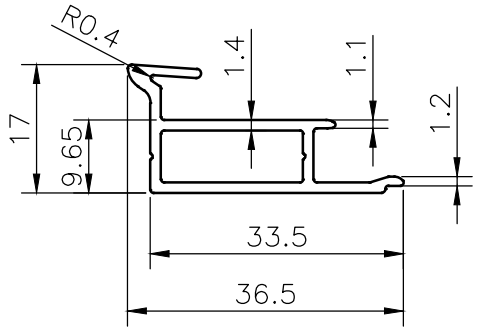

Area:122.26 Sq.mm. | Perimeter:121.358 mm. | Weight:0.33 Kg./mtr.

PROPOSAL DRAWING
Q01605

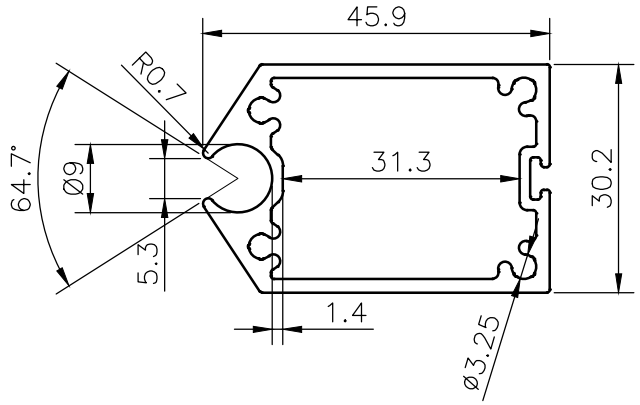

Area:324.673 Sq.mm. | Perimeter:168.803 mm. | Weight:0.877 Kg./mtr.