PATH:DESIGN DATA 6F\HCL & SLC\TCL\TC-EX\RM-EX-0413

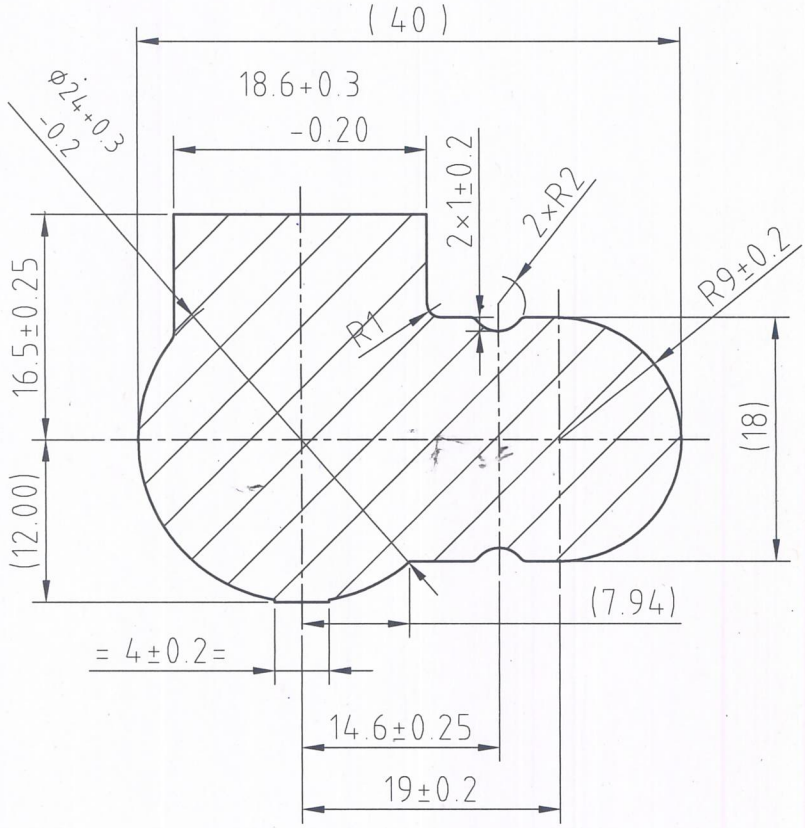

Note- Unspecified corner Radius=0.5mm

*** A3004S-H112

Area= 831.34 mm SQ.

					DESIGNED BY:	-	-
					DRAWN BY:	SUNIL	26.05.23
					CHECKED BY:		
					CHECKED BY:		
					APPROVED BY:		
REV. NO.	NO. OF PLACES	DESCRIPTIONS/ECN NO.	APPROVED BY	DATED	MATERIAL		SCALE
					***		NTS

PROFILE NO.- RM-EX-0413

REF.DRG.NO.-446171-5290 (MODEL-YY8)

ALL DIMENSIONS ARE IN MM

HARDNESS	SURFACE TREATMENT
-	-

DRAWING NO. : TC-EX-413

Global Autotech

DESCRIPTION : TUBE CONNECTOR EXTRUSION