Q03263

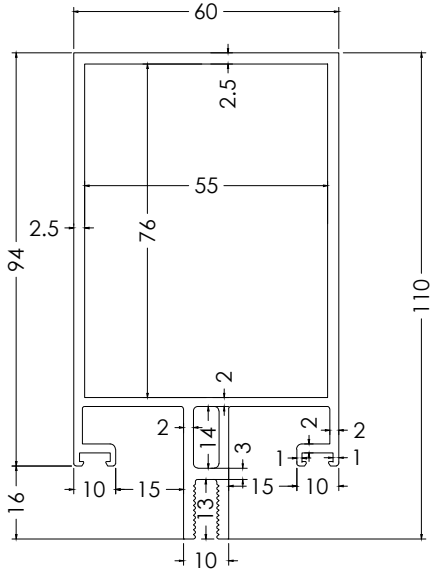

ALU. MULLION

Q51240

Q03264

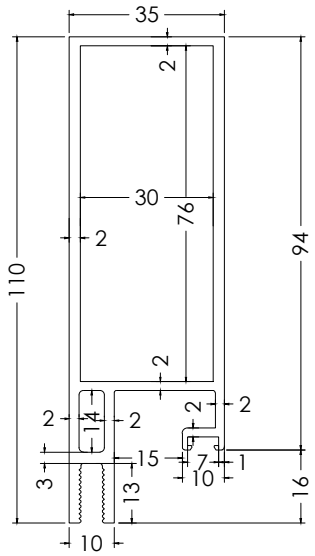

ALU. SPLIT MULLION

Q51241

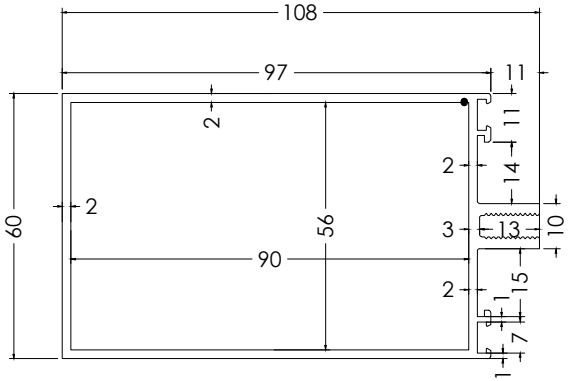

ALU. TRANSOM

Q51242

Q03265

* GENERAL NOTES:

- ALL DIMENSION AND LEVELS ARE IN MILLIMETERS.
- ALL DIMENSIONS ARE TO BE READ NOT MEASURED.
- ALL ELEVATIONS VIEWED FROM OUTSIDE.

REFERENCE DRAWINGS:

DESIGN DRAWING NO.	REV. NO.	DATE:

STRUCTURE CONSULTANT:

ARCHITECT:

SnJ Associates
B-242 C. R. Park,
Lower Ground Floor,
New Delhi 110 019, INDIA

PROJECT: PROPOSED HOTEL
AT CHATIKARA, VRINDAVAN,
UTTAR PRADESH, INDIA

CLIENT: M/S BRIJWASI FARMS

ISSUE

NO.	DESCRIPTION:	DATE:	REV.BY

DISCIPLINE:

FACADE CONTRACTOR:

NITSON AND AMITSU PRIVATE LIMITED
ENGINEERS
LOCATION:- A - 116 ,DDA SHED,OKHLA INDUSTRIAL AREA, PHASE-2 NEW DELHI-110020
Phone:011- 0126383322,3321,3324 E-MAIL: delhi@nitsonamitsu.in

DRAWING TITLE:

ALU. PROFILE FOR DIE DRAWING

	NAME	SIGN	DATE
DETAILED			26.03.2025
DRAWN	UJJWAL		
CHECKED	PIYALI		
APPROVED	A.DAS		

PROJECT CODE

SCALE 1:1(A3) SIZE

PROJECTION

DRAWING NUMBER: NAP/BS/B.H.P./DD-01

REV: 00

RELEASE FOR: ☐ PRELIMINARY ☐ APPROVAL ☐ TENDER ☐ INFORMATION ☐ CONSTRUCTION

This Drawing is the Property of NAP and must not be copied or lent without their permission in writing