JAL–B–016
–

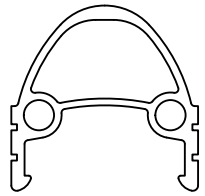

SCALE 1:1

NOTE:-

R=0.50R

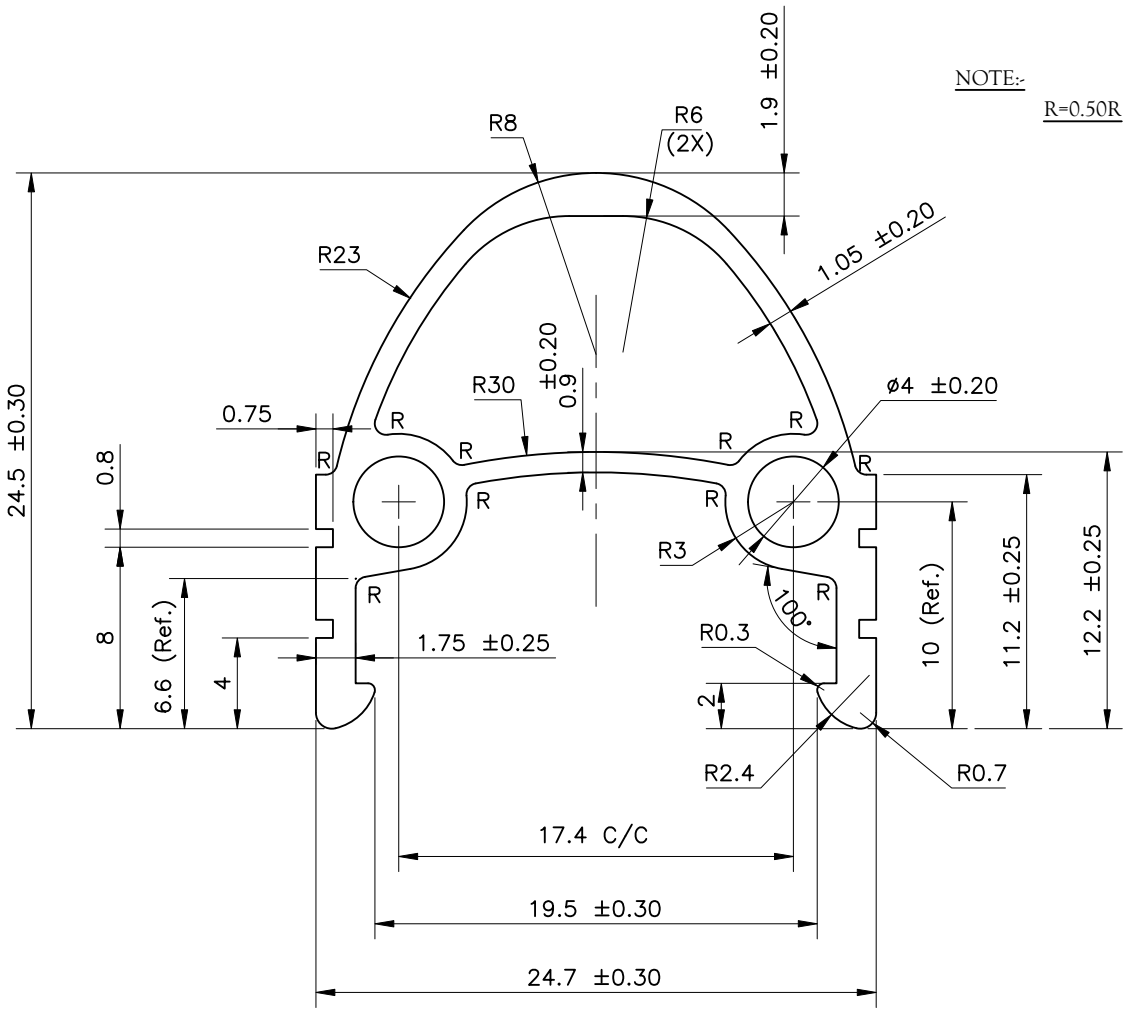

TWIST= ±1/4°/300M.M./M.

FLATNESS=WIDTHX0.005mm.

STRAIGHTNESS= 1.5 M.M./MTR.

ANGULARITY= ±1.5°

			NAME	DATE
JINDAL SYMBOL OF QUALITY AN ISO 9001 COMPANY	*JINDAL ALUMINIUM LTD.* *BANGALORE–560073 (INDIA)*	DRAWN	*ASHUTOSH*	08–06–2022
		CHECKED		
		APPROVED		

1. ALL DIMENSIONS ARE IN mm.
2. ROUND OFF ALL SHARP CORNERS WITH 0.40 mm.
3. TOLERANCES WILL BE AS PER BS:EN–755–9 , UNLESS OTHERWISE SPECIFIED

SCALE	1:1&3:1
AREA mm^2	117.7
PERIMETER mm.	110.76
WEIGHT kg/m	0.318

PARTY'S NAME	M/S. HERO CYCLES
PARTY'S DRAWING No.	AS PER DRAWING–LDH–15/A
ALLOY & TEMPER	6063–T6
DESCRIPTION	––

DRAWING No.	SECTION No.
JAL–B–016	
–	–