LWACCN/EOG/GR-4-2-011

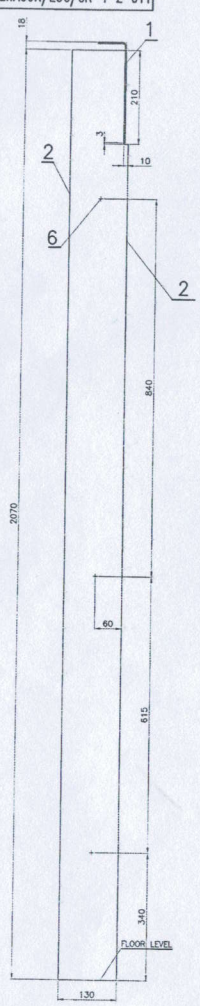

SEC-AA

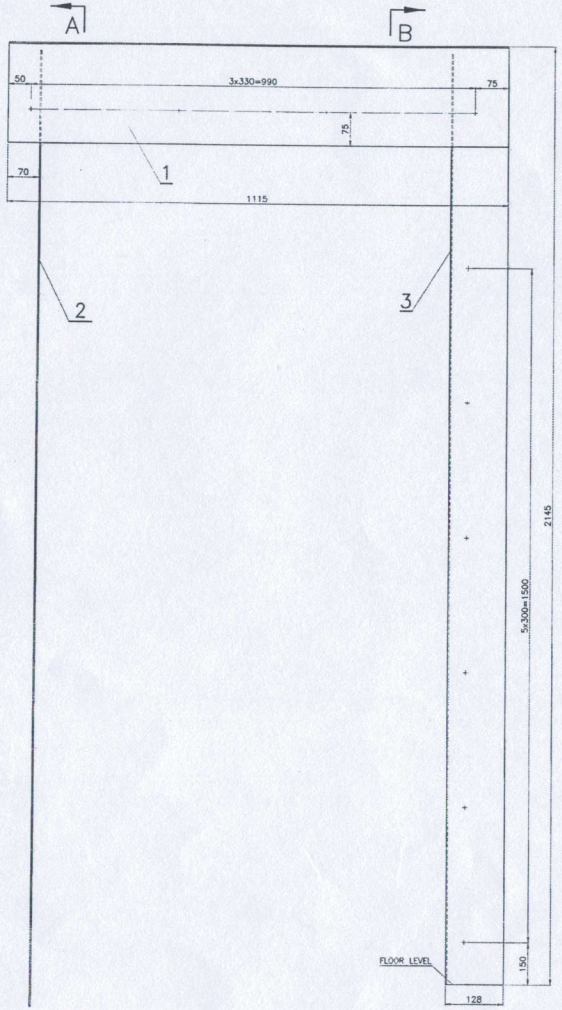

VIEW-X

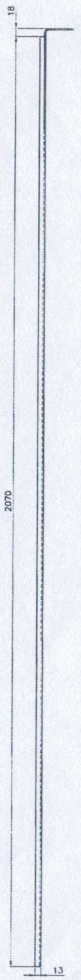

SEC-BB

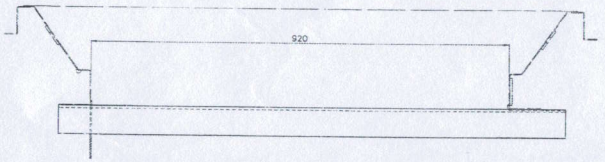

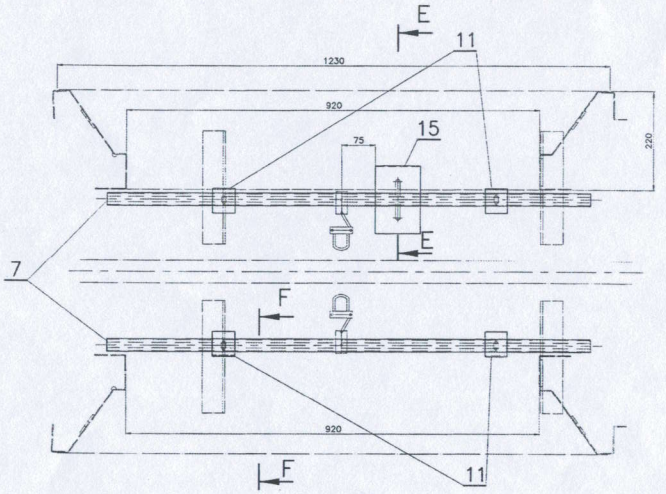

DETAIL AT DOOR-P & Q
(WITHOUT PANELS 1-5)

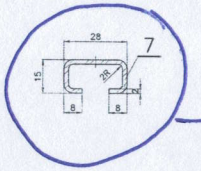

C - Rail

▽ ROUGH MACHINED	ROUGH CLEANED	ALTERATIONS
▽▽ FINISH MACHINED		
▽▽▽ FINE FINISH MACHINED		

NO OFF IV	III	II	I	PER ASSY.	DESCRIPTION&DIMENSIONS	ITEM	REF.DRG.	MATL.&SPEC.	WEIGHT/UNIT	REMARKS
					GROUP 4-2. SIDEWALL PANELLING				SUPERSEDED BY:	
					PANELLING ARRGT. (FRP) FOR DOOR FRAME PORTAL (GARIB RATH COACH)				SUPERSEDES:	

SCALE	SSE/D
1:5	CHD
1:10	ALT
	DRN
ALT	

CAD FILE:- C:\MD-CAD\874\4-2\874-4-2-011_1-2.DWG

ALT	DATE OF LATEST ALTN.	DATE OF FIRST ISSUE	SME/AME
		30/09/2020	

LWACCN/EOG/GR-4-2-001
ASSEMBLY DRAWING

DATA CODE No 874

INDIAN RAILWAY STANDARDS

SHEET 1 OF 2

INTEGRAL COACH FACTORY CHENNAI - 38.

LWACCN/EOG/GR-4-2-011

FORM IR A1 840 x 600