Q00151

DRAWING NO.	FGT/S-64/006/BP
(SC)	
(CC)	

M/C DEVIATION FOR OPEN DIMENSIONS (MED.TO IS :2102)								SPECIAL TOLERANCE	
ABOVE	0.5	3	6	30	120	315	1000	H7	+0.013
UPTO AND INCLUDING	3	6	30	120	315	1000	2000	XX.XXX	-0.00O
MEDIUM	±0.1	±0.1	±0.2	±0.3	±0.5	±0.8	±1.2		

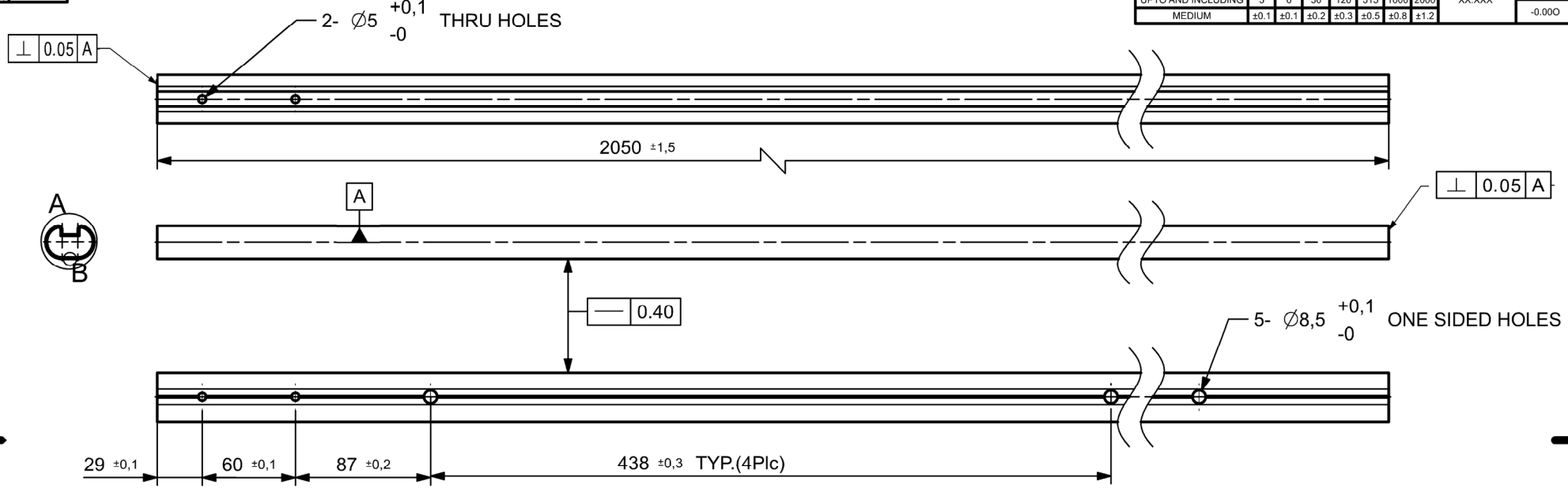

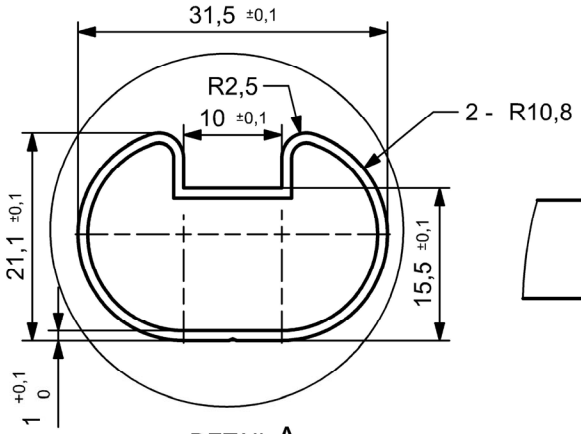

DETAIL A
SCALE 2:1

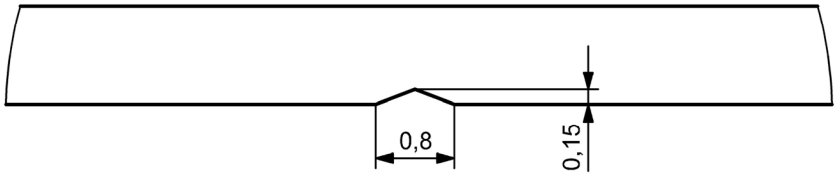

DETAIL B
SCALE 20:1

S.NO.	DESCRIPTION	QTY	RAW MATERIAL	SUB P.O.

REV.	DESCRIPTION	CHANGED BY	APPROVED BY	DATE

A3	NAME	SIGN	DATE
DRAWN	SATNAM SINGH		29/12/20
CHKD.	JAGMEET SINGH		29/12/20
APPRD.	BALJEET SINGH		29/12/20

FALCON® Garden Tools
MALERKOTLA ROAD, ALAMGIR
LUDHIANA-141116 (INDIA)

ASSLY. NAME	HEAT TREATMENT	SCALE N.T.S.
LONG REACH ASSEMBLY (S-64)	N/A	QTY. 01 PER ASSLY
RAW MATERIAL	WEIGHT	SHEET 01 OF 01 / REV. NO. 00
ALUMINIUM ALLOY 6063	0.49 Kg	
PART NAME INNER PIPE		DRAWING NO. FGT/S-64/006/BP

DIMENSIONS ARE IN MM UNLESS STATED OTHERWISE.

THIS DRAWING IS THE SOLE PROPERTY OF FALCON GARDEN TOOLS. IT SHOULD NOT BE COPIED OR COMMUNICATED TO ANY PERSON WITHOUT WRITTEN APPROVAL OF COMPANY.

NOTE:-
1) COMPONENT SHOULD BE FREE FROM TOOL MARKS, DENTS,CRACKS, DIE MARKS ETC.
2) COMPONENT SHOULD WRAPED PROPERLY WITH PROTECTIVE MATERIAL TO AVOID ANY KIND OF DAMAGE.
3) SURFACE FINISH:- ANODIZING