| DRAWING NO. | FGT/S-64/007/BP |
|---|---|
| (SC) | |
| (CC) | |

| M/C DEVIATION FOR OPEN DIMENSIONS (MED.TO IS :2102) | | | | | | | | SPECIAL TOLERANCE | |
|---|---|---|---|---|---|---|---|---|---|
| ABOVE | 0.5 | 3 | 6 | 30 | 120 | 315 | 1000 | H7 | +0.013 |
| UPTO AND INCLUDING | 3 | 6 | 30 | 120 | 315 | 1000 | 2000 | XX.XXX | -0.00O |
| MEDIUM | ±0.1 | ±0.1 | ±0.2 | ±0.3 | ±0.5 | ±0.8 | ±1.2 | | |

Q00152

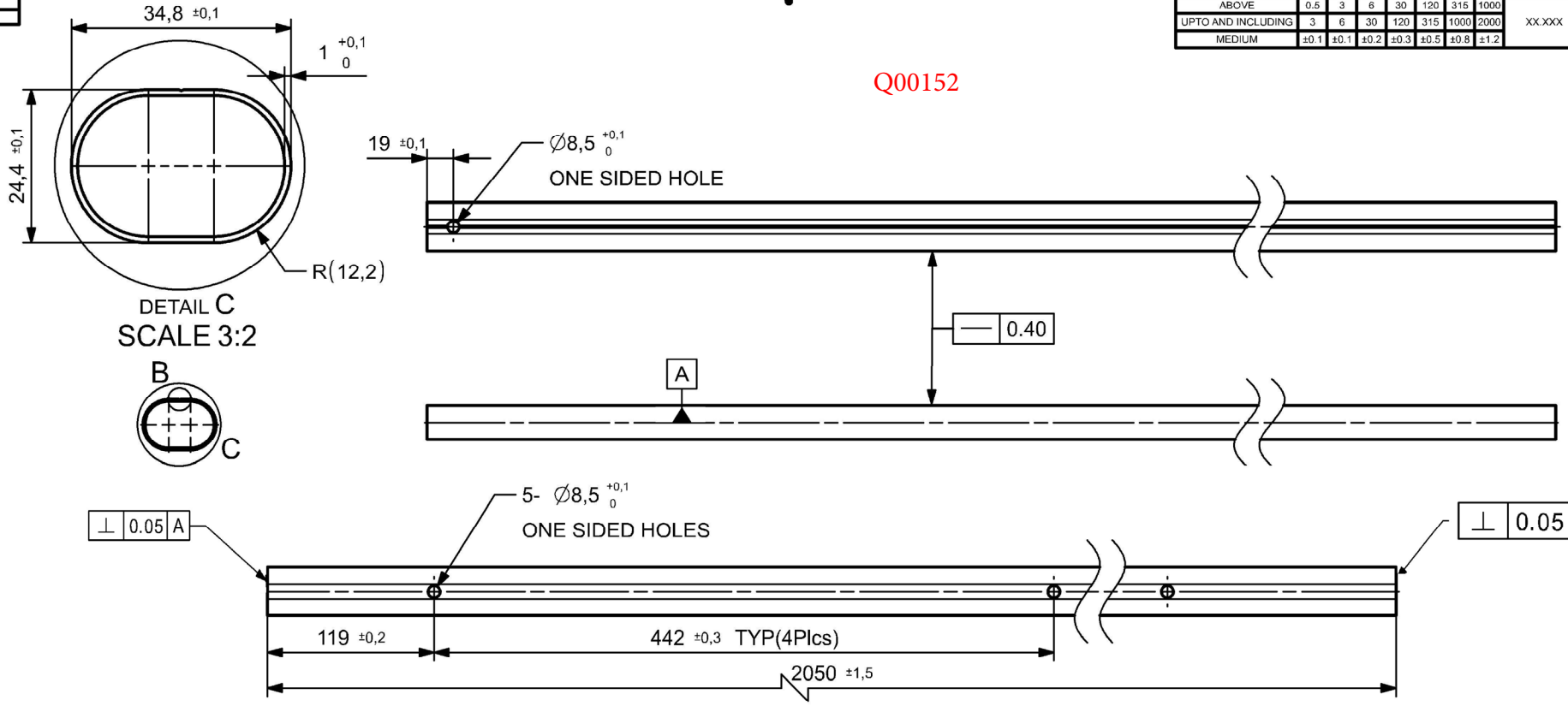


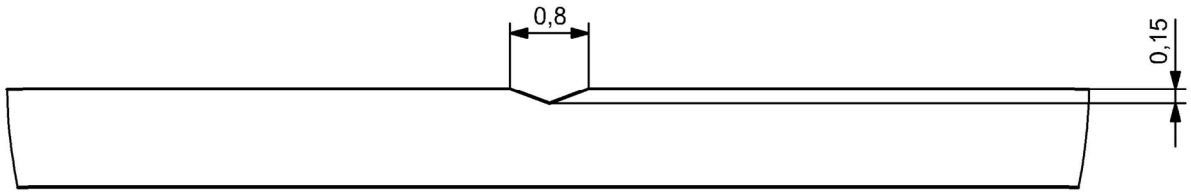


DETAIL B
SCALE 20:1

| S.NO. | DESCRIPTION | QTY | RAW MATERIAL | SUB P.O. |
|---|---|---|---|---|
| | | | | |

| REV. | DESCRIPTION | CHANGED BY | APPROVED BY | DATE |
|---|---|---|---|---|
| | | | | |

| A3 | NAME | SIGN | DATE |
|---|---|---|---|
| DRAWN | SATNAM SINGH | | 29/12/20 |
| CHKD. | JAGMEET SINGH | | 29/12/20 |
| APPRD. | BALJEET SINGH | | 29/12/20 |

FALCON® Garden Tools
MALERKOTLA ROAD, ALAMGIR
LUDHIANA-141116 (INDIA)

| ASSLY. NAME | HEAT TREATMENT | SCALE N.T.S. |
|---|---|---|
| LONG REACH ASSEMBLY(S64) | N/A | QTY. 01 PER ASSLY |
| RAW MATERIAL ALUMINIUM ALLOY 6063 | WEIGHT 0.52 Kg | SHEET 01 OF 01 REV. NO. 00 |
| PART NAME CENTRAL PIPE | | DRAWING NO. FGT/S-64/007/BP |

DIMENSIONS ARE IN MM UNLESS STATED OTHERWISE.

THIS DRAWING IS THE SOLE PROPERTY OF FALCON GARDEN TOOLS. IT SHOULD NOT BE COPIED OR COMMUNICATED TO ANY PERSON WITHOUT WRITTEN APPROVAL OF COMPANY.

NOTE:-
1) COMPONENT SHOULD BE FREE FROM TOOL MARKS, DENTS,CRACKS, DIE MARKS ETC.
2) COMPONENT SHOULD WRAPED PROPERLY WITH PROTECTIVE MATERIAL TO AVOID ANY KIND OF DAMAGE.
3) SURFACE FINISH:- ANODIZING