版别			日 期

6005-Q03362
6063-Q03363

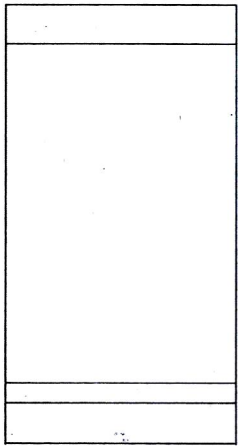

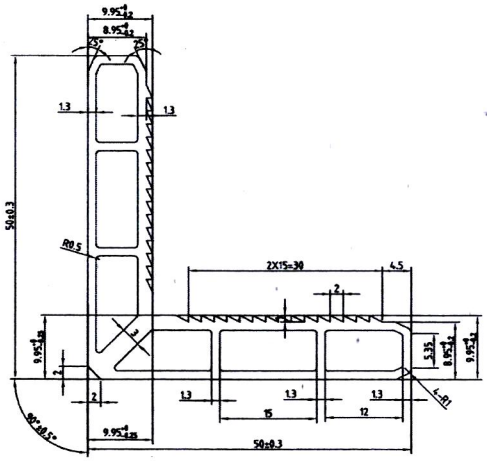

1: 1

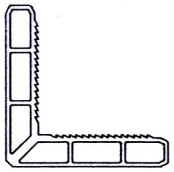

NOTE:
1)PLEASE MARK EXPOSED SURFACE IF ANY
2)FINISH:MILL FINISH/ANODIZING /POWDER COATED PLEASE MENTION.
3)THE PRODUCT IS EXEXUTED WITH HIGH PRECISION ACCORDING TO GB/T 5237-2017.

Product name:HT-35 Frame drawing			material:6005-T6	
DRG NO: 2278-1133-35			WT:0.946 KG/M	
APPD	CHKD	DRN	Date	FLATNESS:±1MM
			2024.7.12	SCALE: 1:1
				REV: 01
				PAGE 5-4

Tolerance Range	
≦10	± 0.15
>10~15	± 0.17
>15~30	± 0.21
>30~45	± 0.26
>45~60	± 0.31
>60~	± 0.52

3rd Angle System