F:DDC:04:00

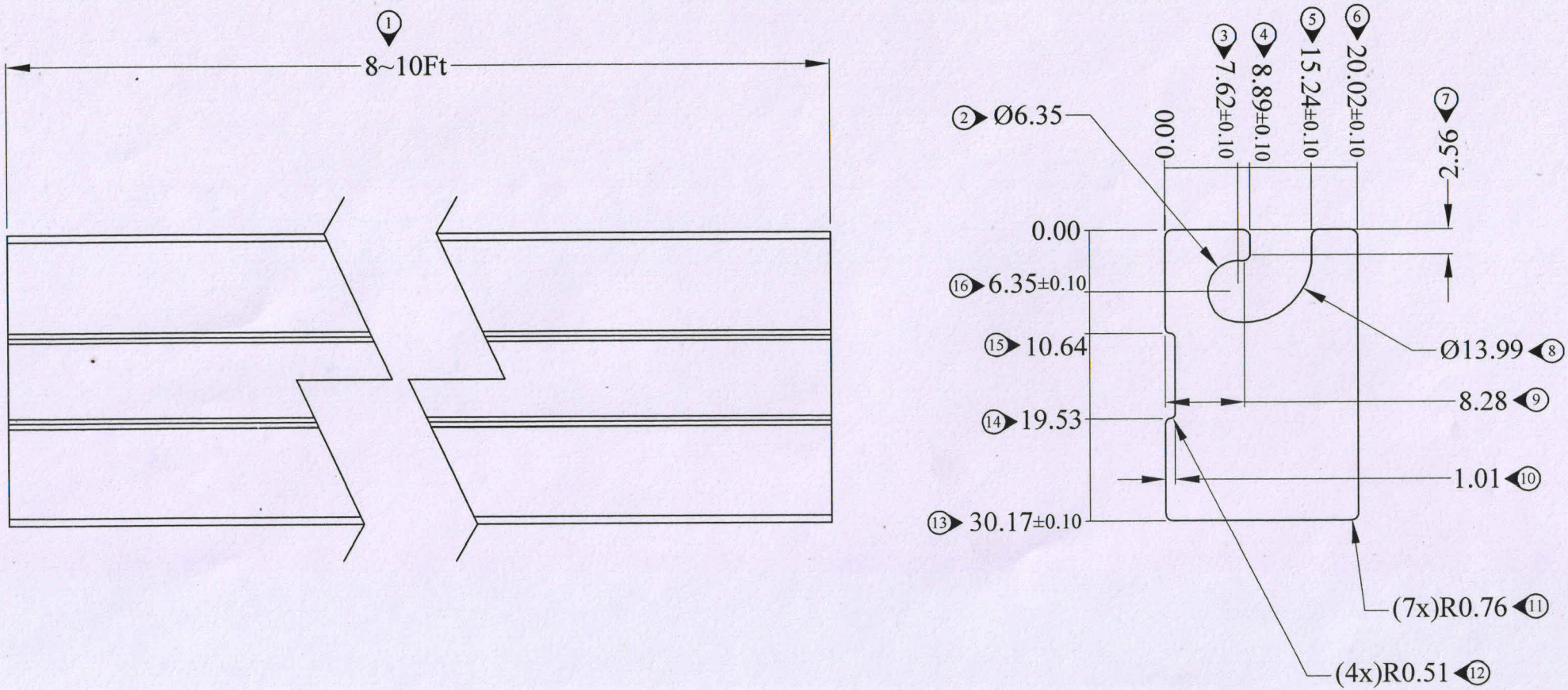

GENERAL TOLERANCE	WHEN IN DOUBT ASK ALL DIMENSIONS IN M.M.			MATERAIL 6061 T6 ALUMINIUM	STAGE: RAW MATERIAL
LINEAR ±0.10		DATE	SIGN	TREATMENT: -	CUST. REV. NO. NA
ANGLES ±1°	SCALE FIT TO PAPER	DRAWN 16.10.24	PRASHANT	DRAWING NO. SICPL-ECM-RM901002	SMITH REV. NO. 00
		CHECK 16.10.24	PRADEEP		
		AUTH 16.10.24	PARIMAL		
		SMITH INDUSTRIAL CORPORATION PVT. LTD. PLOT SHED A, AT HARSHA TRACTORS, SITE - 2, LONI ROAD GHAZIABAD, U.P. (INDIA) - 201007		COMPONENT NAME J SECTION - DB LUG	
				SAP CODE	

REV. NO.	DATE	DESCRIPTION

16-10-2024 14:33:19

A4