P-JAL-B-047-1
–

PROPOSED DRAWING

SCALE 1:1

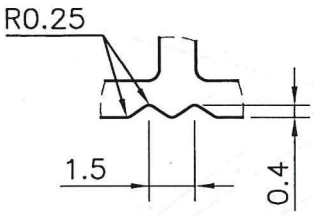

DETAIL A
SCALE 4:1

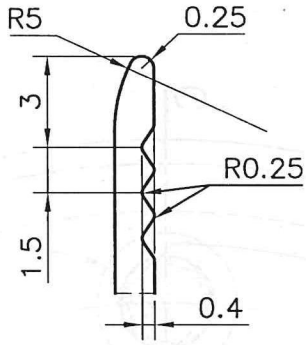

DETAIL B
SCALE 4:1

Q00215

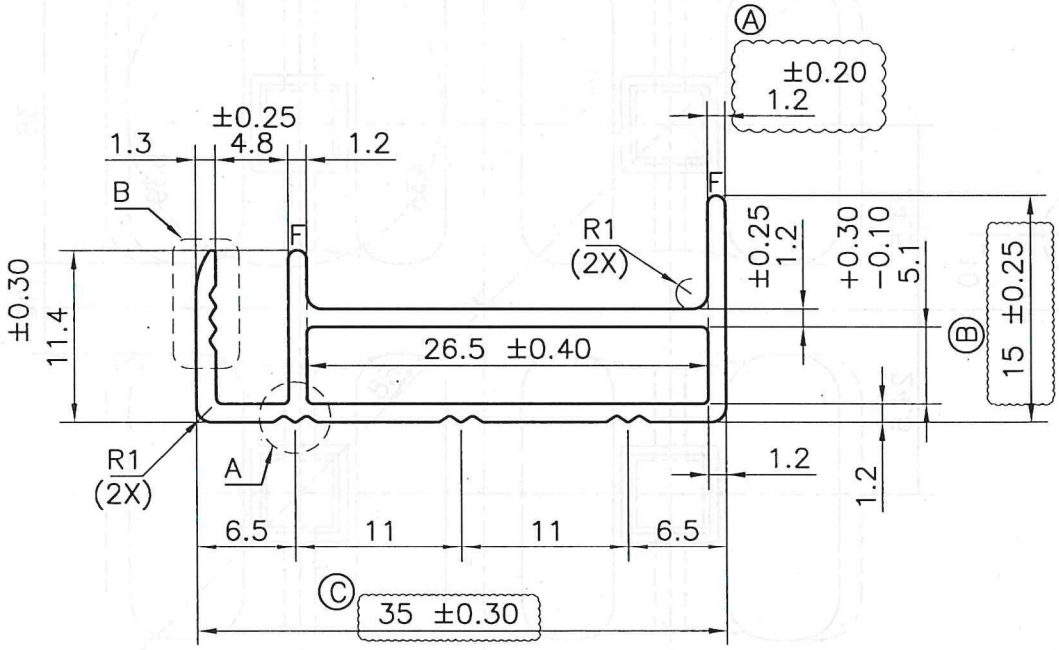

NOTE:–
F= FULL RADIUS

NOTE:–
(A) Dim. 1.2±0.20 was 1.3±0.25
(B) Dim. 15±0.25 was 15±0.30
(C) Dim. 35±0.30 was 35±0.40

JINDAL
SYMBOL OF QUALITY
AN ISO 9001 COMPANY

JINDAL ALUMINIUM LTD.
BHIWADI–301019 (INDIA)

	NAME	DATE
DRAWN	ASHUTOSH	08–11–2022
CHECKED	Sunil	8-11-22
APPROVED	JRan	08.11.22

1. ALL DIMENSIONS ARE IN mm.
2. ROUND OFF ALL SHARP CORNERS WITH 0.40 mm.
3. TOLERANCES WILL BE AS PER BS:EN–755–9 , UNLESS OTHERWISE SPECIFIED

SCALE	1:1&2:1
AREA mm^2	112.19
PERIMETER mm.	126.28
WEIGHT kg/m	0.303

PARTY'S NAME	M/s. GAUTAM SOLAR
PARTY'S DRAWING No.	AS PER MAIL (08.11.2022)
ALLOY & TEMPER	6063–T6
DESCRIPTION	––

DRAWING No.	SECTION No.
P–JAL–B–047–1	