P-25547-1

–

SCALE:-1:1

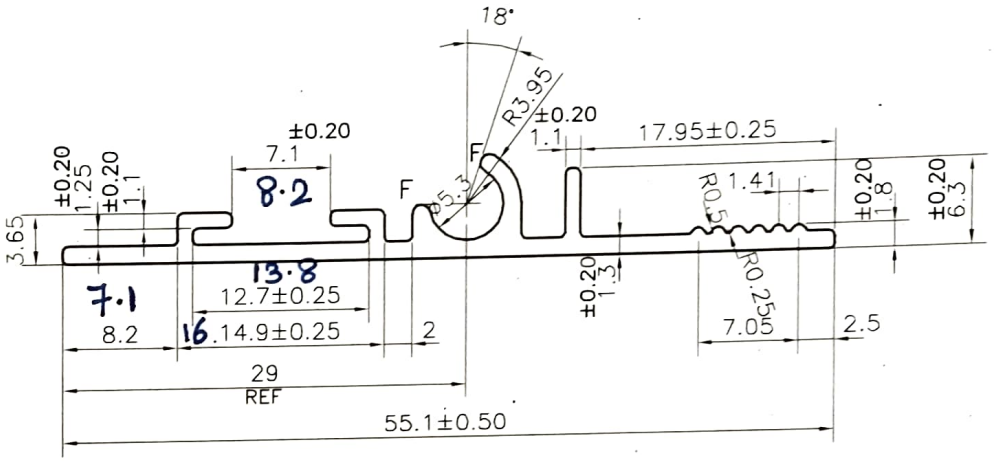

Please change the dimensions and temper.

F = FULL RADIUS (2PLACES)

1. STRAIGHTNESS=1.7mm/M
2. TWIST=1.7mm/M
3. ANGULARITY= ±2°
4. FLATNESS =0.007xWIDTH

UNCONTROLLED COPY

1) THE WELDING LINE IN THE EXPOSED SURFACE OF PROFILE IS UNAVOIDABLE. 2) PLEASE SPECIFY IMPORTANT SIZES. 3) PLEASE SPECIFY IF THIS PROFILE MATCHES WITH OTHER PROFILES. 4) PLEASE SPECIFY EXPOSED SURFACE. OTHERWISE CONSIDERED AS NO EXPOSED SURFACE. 5) FINISH :- ☐ MILL FINISH / ☐ ANODIZING / ☐ POWDER COATING

JINDAL
SYMBOL OF QUALITY
AN ISO 9001 COMPANY

JINDAL ALUMINIUM LTD.
BANGALORE-560073 (INDIA)

	NAME	DATE
DRAWN	J.P.KAUSHIK	22-06-2023
CHECKED		
APPROVED		

1. ALL DIMENSIONS ARE IN mm.
2. ROUND OFF ALL SHARP CORNERS WITH 0.40 mm.
3. TOLERANCES WILL BE AS PER IS:3965-1981, UNLESS OTHERWISE SPECIFIED

SCALE	2:1
AREA mm²	105.666
PERIMETER mm.	157.725
WEIGHT kg/m	0.285

PARTY'S NAME	ADMIRE AIR TECH, NEW DELHI.
PARTY'S DRAWING No.	AS PER DRAWING
ALLOY & TEMPER	6063 T5/6063 T6 — PRODUCT CODE:-082 / HSN CODE:-76042990
DESCRIPTION	AIR GRILL SECTION

DRAWING No.	SECTION No.
P-25547-1	–
–	–