CUSTOMER NAME:	NITSON AND AMITSU PVT. LTD.
PROJECT NAME:	CANDOR
SEGMENT:	B&C
ALLOY & TEMPER:	6063 & T6
OFF TAKE IN MT:	6.34 MT APPROX
FINAL FINISH:	MILL FINISHED
PROFILE APPLICATION:	UNITIZED GLAZING
CUT LENGTH:	4100 MM TO 6000 MM
WEIGHT:	2.203 KG/MTR
QTY:	2880 RMT APPROX
DIMENSIONAL DRAWING:	SHOWN IN BELOW

Q03460

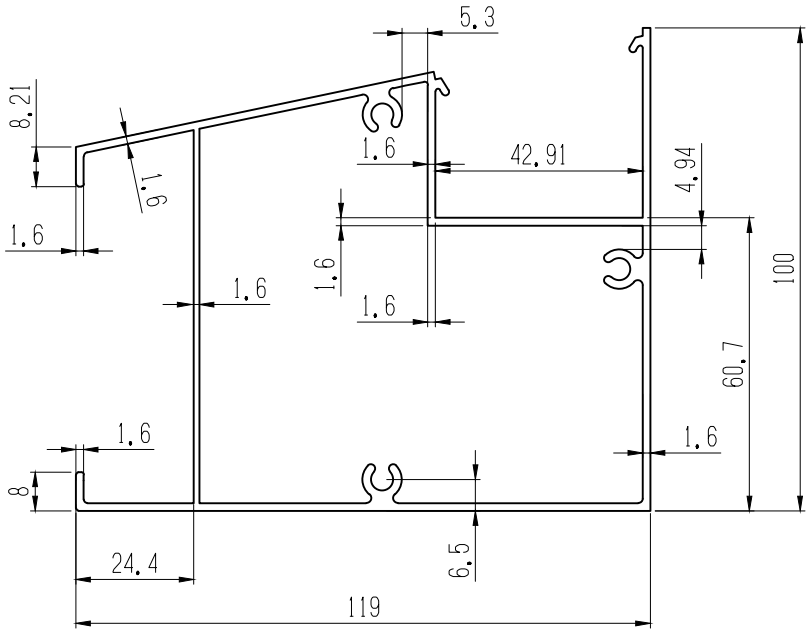

FIN-2

Bhoruka proposal