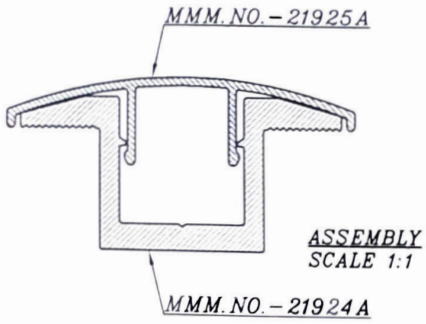

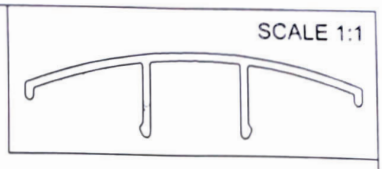

Q00742

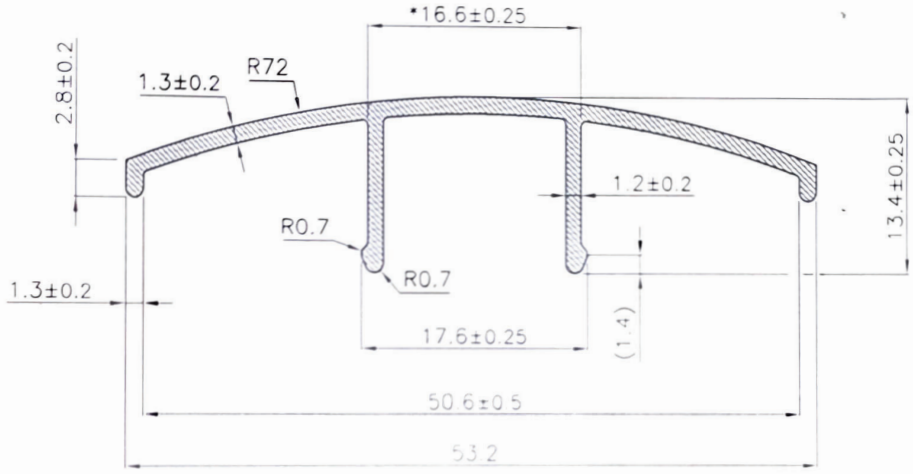

For ORNATE AGENCIES PVT. LTD.
Authorised Signatory

UNSPECIFIED CORNER RADIUS: 0.40MM

ALL DIMENSION ARE IN MM		UNSPECIFIED TOL ±0.2 mm			PERIMETER	00.00 mm	162.335 mm	AREA	103.853 mm²
					CRITICAL DIM.	*		WEIGHT	0.280 Kg/M
					SEC. TYPE	SOLID		WT. RANGE	0.240-0.320 Kg/M
					ANGULARITY	±2°		ALLOY / TEMPER	6063 T6
					TWIST	1/4°/300mm/M		MMM. NO.	21925A
REV. STATUS	REV. NO.	DESCRIPTION	DATE	SIGN	STRAIGHTNESS	1.7mm/M		SECTION No.	000-0000
		REVISION	DATE	25.11.2021	FLATNESS	WIDTHX0.005mm			
CHECKED	JITENDER	APPROVED		SCALE	2:1	CAVITY	1	-	-
DRAWN BY	Deewan	TYPE - XX - XXXXX				DIE DIA	160 mm	-	-
CUSTOMER NAME:-	MM METACRAFT.PVT.LTD.						PRESS	PRESS	PRESS
CUSTOMER REF NO:-	Panel Cover						660	1100	1600

mm metacraft pvt. ltd.
www.mmmetacraft.com

WITH DIN ISO 2768 - 1 class C = Coarse

Dimension Longitudinal	0.5 - 3 ±0.2	3 - 6 ±0.3	6 - 30 ±0.5	30-120 ±0.8	120-400 ±1.2	400-1000 ±2.0
Chamfer & Radius	0.5 - 3 ±0.4	3 - 6 ±1.0	0 - 6 ±2.0			
Degrees & Minutes	at 10 ±1°30'	10-50 ±1°	50-120 ±0°30'	120-400 ±0°15'	over 400 ±0°10'	