ITEM	QTY	PART NAME	PART NUMBER	MATERIAL	REMARK	MASS (Kg.)
1	1	INNER PART	Y001976-D11	EN AW 6082 T6 OR COMPAREABLE		0,084kg

VER	PLS	DESCRIPTION	CHD BY	DATE	APD BY	ECR
A	-	INITIAL RELEASE	JB			XXXX

Q03474

CHANGES OF PREMATERIAL , DESIGN, PROCESS, TOOLS OR SUPPLIERS REQUIRE APPROVAL BY PRODUCT DEVELOPMENT.

PART FREE OF CRACKS AND BURRS.

DELIVERY CONDITION:
SURFACES TO BE FREE OF GRAPHITE, SILICONE COMPOUNDS, MOLYBDENUM DISULPHIDE, SULFUR, GREASE AND DIRT.

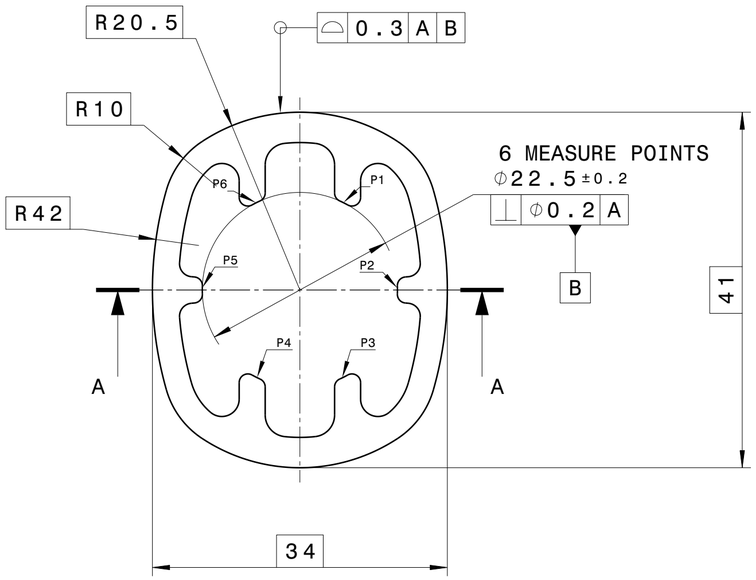

TEDs ACCORDING TO DATA: Y001976-D11
ALL SURFACES 0.5 UNLESS OTHERWISE SPECIFIED.

-0.2 EDGES acc. DIN ISO 13715

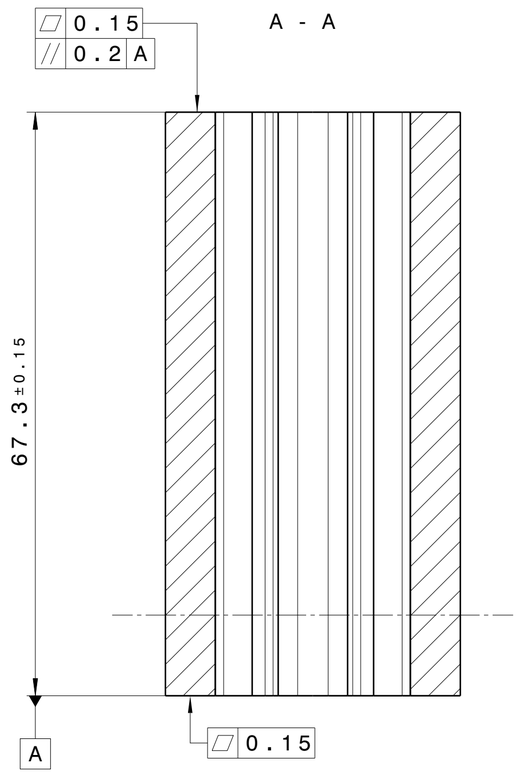

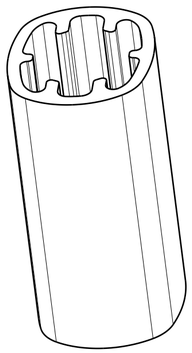

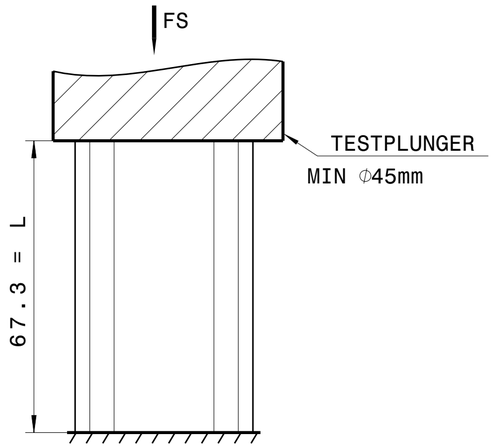

Compression test
Core stability: FS_{t-1} = 120kN ; FSt-2 = 0.5*FSt-1
Strain velocity: x to 2 $^{mm}/_{min}$
Max. permanent compression s ≤ 0.2% of L[mm]

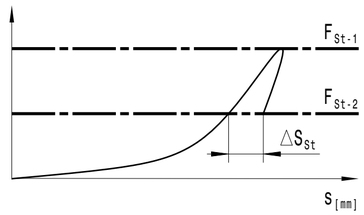

DRN.BY: J.BUSCH 14MAY25	PROPERTY OF ANP	ANAND NVH PRODUCTS INC.		
APD.BY: S.SIEKER 14MAY25	THIS DRAWING IS THE SOLE PROPERTY OF ANP. IT CANNOT BE COPIED BY ANYONE WITHOUT WRITTEN PERMISSION OF ANP			
CAD SYSTEM: CATIA V5 / PROTECTION MARK: ISO 16016				
TOLERANCED: EN 755-9 ISO 8015	UNIT - MM / SCALE - 2:1 / SHEET - A2	MODEL IS MASTER FOR ALL NON-DIMENSIONED FEATURES	TITLE: INNER PART	
MASS: 0,084kg (C) CALCULATED - ACTUAL / THIRD ANGLE PROJ				
CUST REFERENCE NO. XXXXX	PRODUCTION REFERENCE NO. XXXXX		PART NO.: Y001976-D11	A

Isometric view