Q03519

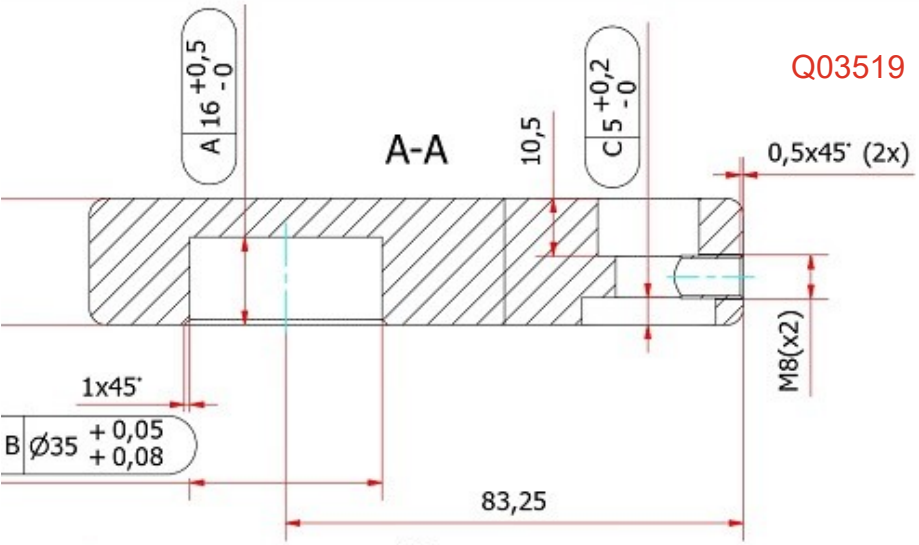

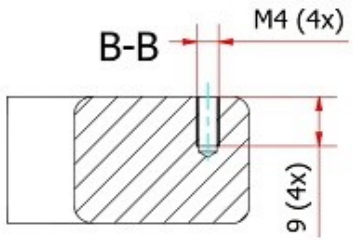

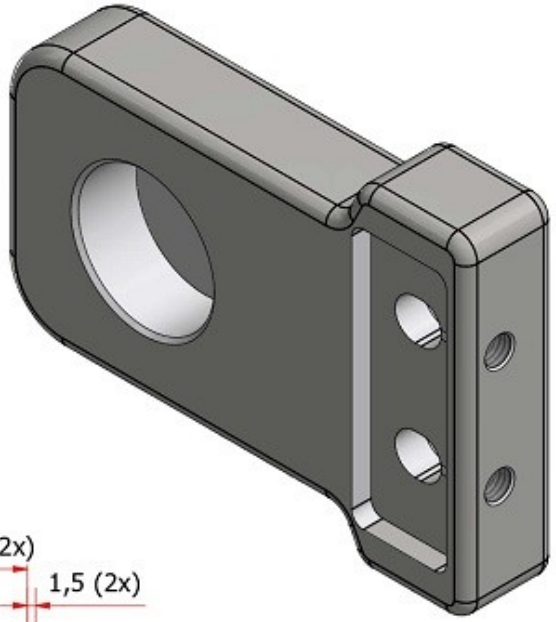

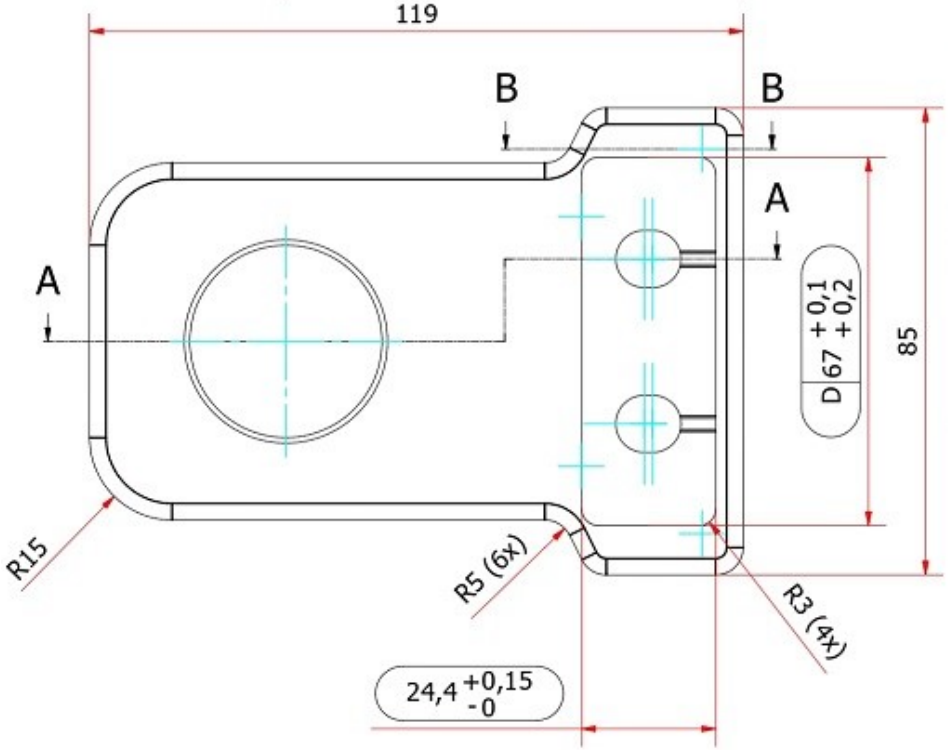

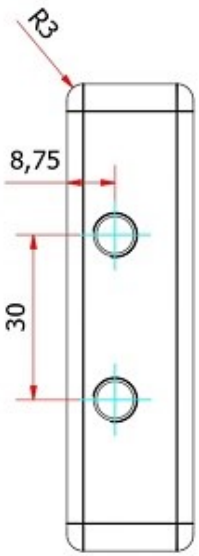

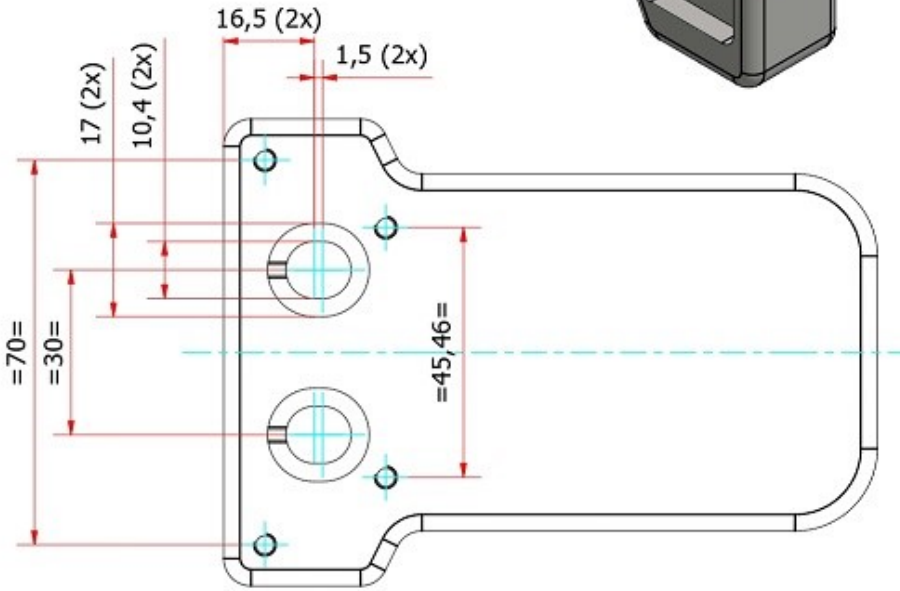

Material dimensions: 100*25*
Saw lenght: 121 mm

Description		
Scharnier plaat top 02		
Material : EN AW 6060-T66		Mass : 0,424 kg
Finish treatment : Black anodizing 20 µm		Engineer : SP / Creation Date : 16-2-2
General tolerances ISO 2768-1 (medium) Geometrical tolerancing NEN-ISO 1101	A3	Checked by : SP / Date checked : 29-3-2
		Design state : Released
		BOM nr. :
		Drawing nr.: 100-100202-100