VER	PLS	DESCRIPTION	CHD BY	DATE	APD BY	ECR
A		INITIAL RELEASE				1303
B	2	1. 3X WAS BASIC DIM 2. REMOVED ⌭ 0.2 CALLOUT	RPC	10OCT23	RE	1373
C	2	1. MODIFIED PROFILE 2. WAS 23.5 ±0.5	RPC	25FEB24	RE	1513
D	3	1. MODIFIED PROFILE 2. NOTE ADDED 3. TOLERANCING CHANGED	BU	23JAN25	SS	

(D) Changes of material, design, process, tools or supplier require approval by product development

Part must be free of cracks and burrs

Section view B-B

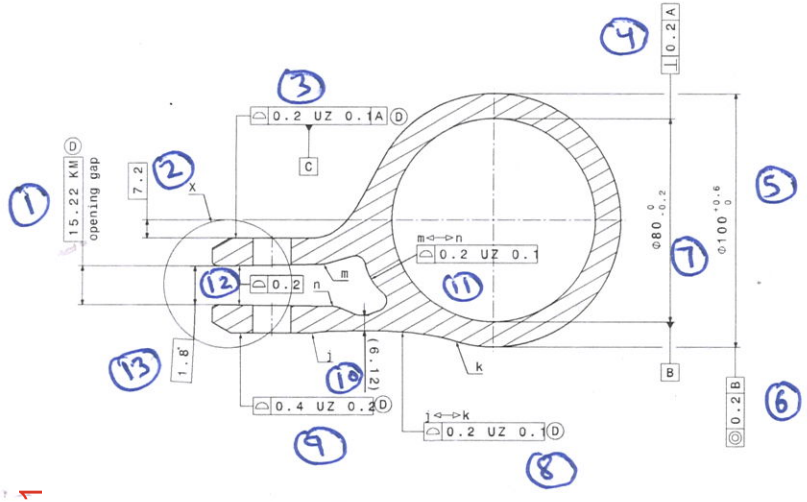

Detail X
Scale: 2:1

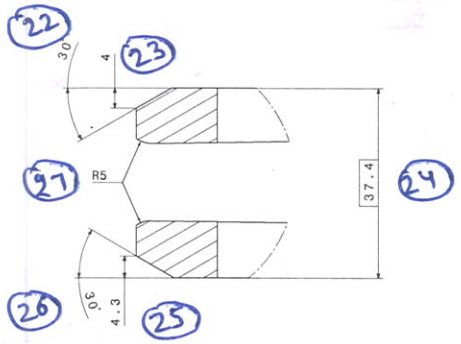

Section view C-C

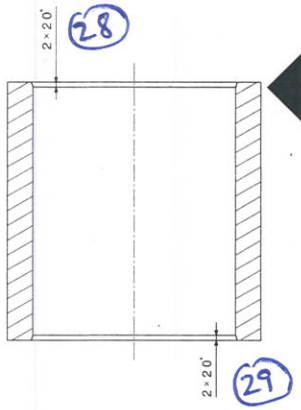

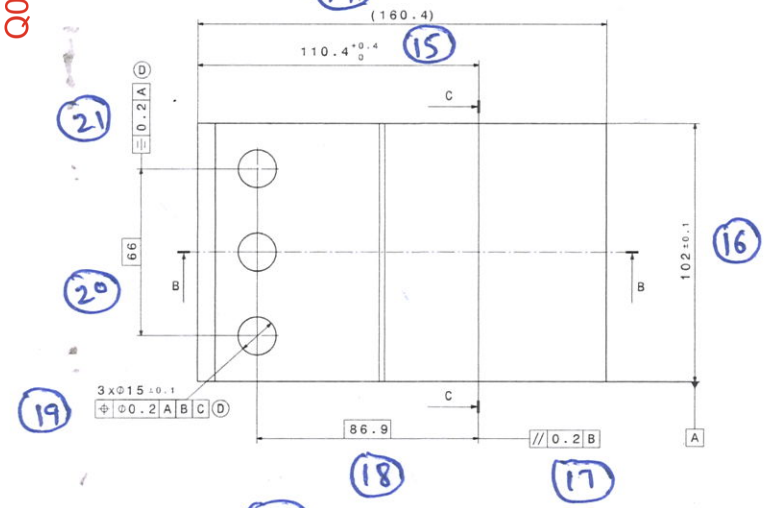

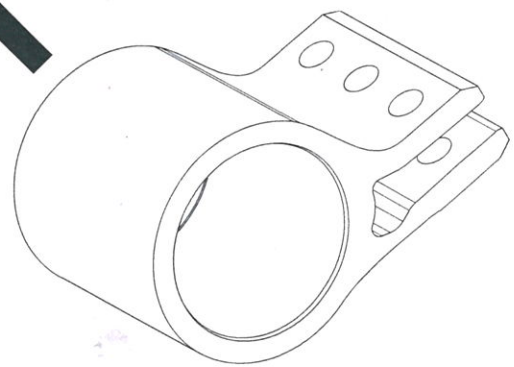

Isometric view
Scale: 1:1

MATERIAL: ALUMINUM 6082-T6

ALL UNDIMENSIONED FEATURES TO BE TAKEN FROM SOLID MODEL

⌭ 1 A B C

DELIVERY CONDITION:
SURFACES TO BE FREE OF GRAPHITE, SILICONE COMPOUNDS, MOLYBDENUM DISULPHIDE, SULFUR AND DIRT

-0.2 EDGES acc. DIN ISO 13715

DRN.BY:	R.CHURCH	10AUG23	PROPERTY OF ANP THIS DRAWING IS THE SOLE PROPERTY OF ANP. IT CANNOT BE COPIED BY ANYONE WITHOUT WRITTEN PERMISSION OF ANP	anp ANAND NVH PRODUCTS INC.
APD.BY:	R.ELSTRO	10AUG23		
CAD SYSTEM: CATIA V5	PROJECTION MARK: ISO 16015			
TOLERANCES: ISO 2768-mK ISO 8015	ISO GEOMETRY TOLERANCE: ISO 1101 (PART STATED)		UNIT - MM SCALE - 1:1 SHEET - A2 MODEL IN MASTER FORM ALL NON-DIMENSIONED FEATURES	TITLE: BRACKET PT7
(D) MASS: 1,186kg (31)	CALCULATED / ACTUAL	THIRD ANGLE PROJ.		
JOB REFERENCE NO.: XXXXX			PROJECTION REFERENCE NO.: XXXXX	PART NO.: U-F41709-D01 D

DRAFT

Q03521