DO NOT SCALE DRAWING

1st ANGLE

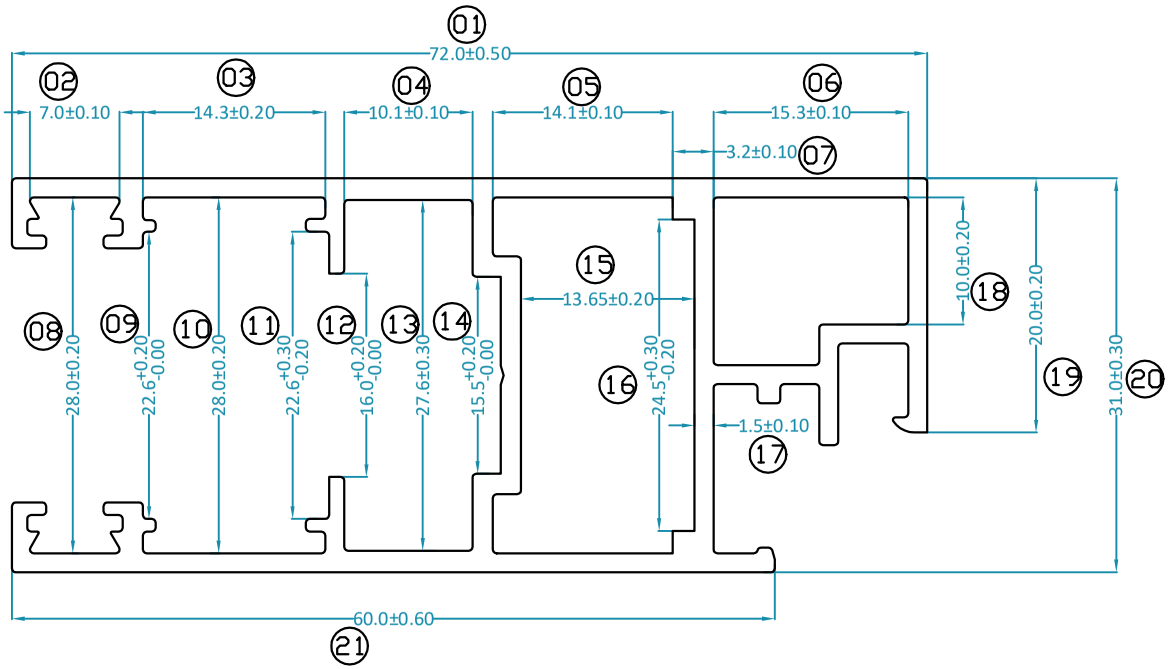

SECTION A-SCALE-3:1

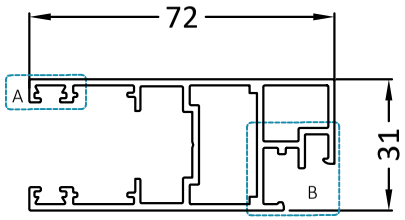

SCALE-1:1

Q03539

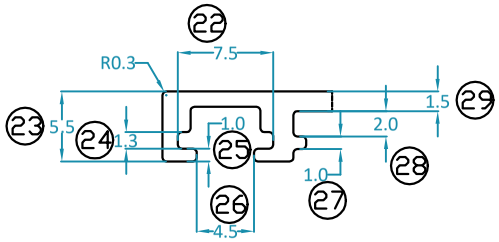

SECTION A-SCALE-3:1

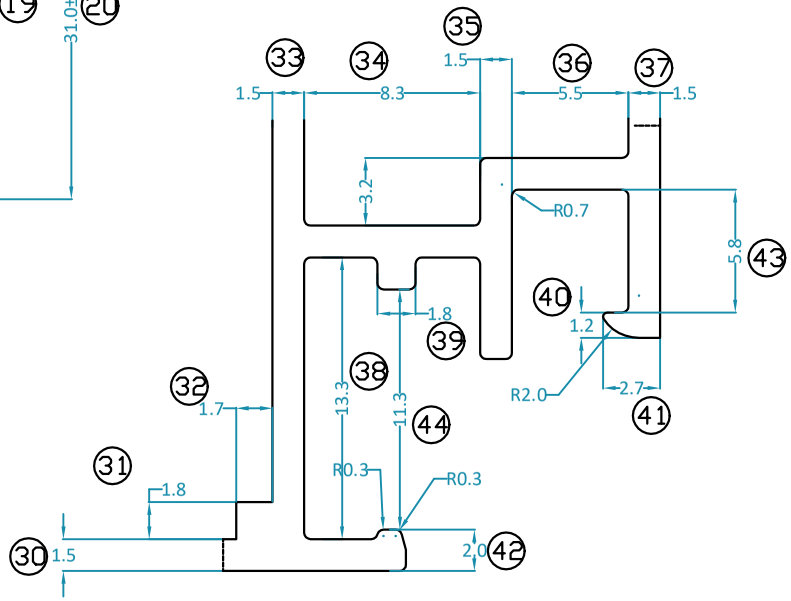

SECTION B-SCALE-5:1

Description	FLYMESH SHUTTER				
PART CODE	A31SS002				
Material	ALUMINIUM 6063-T6	I xx value	260938.75 mm4	Unspecified tolerance	±0.3 mm
Colour / Finish	MILL FINISH	I yy value	86992.15 mm4	Unspecified radii R	1.0 mm
Total area	421.786 mm2	Outer wall thickness	1.2±0.2 mm	Unspecified radii r	0.5 mm
Total Weight (MGW)	1.138 KG/Mtr	Main wall thickness	1.2±0.2 mm	Drawn by	RD
Length	5.8Mtr	Inner wall thickness	1.2±0.3 mm	Drawing date	2025.05.13
Scale 1:1,3:1,5:1		Angular tolerance	90°±0.5°	Drawing issue	A