DO NOT SCALE DRAWING

1st ANGLE

Q03549

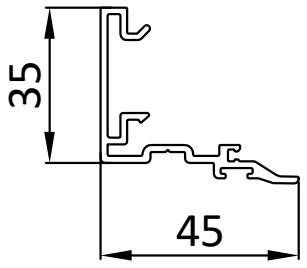

SCALE-1:1

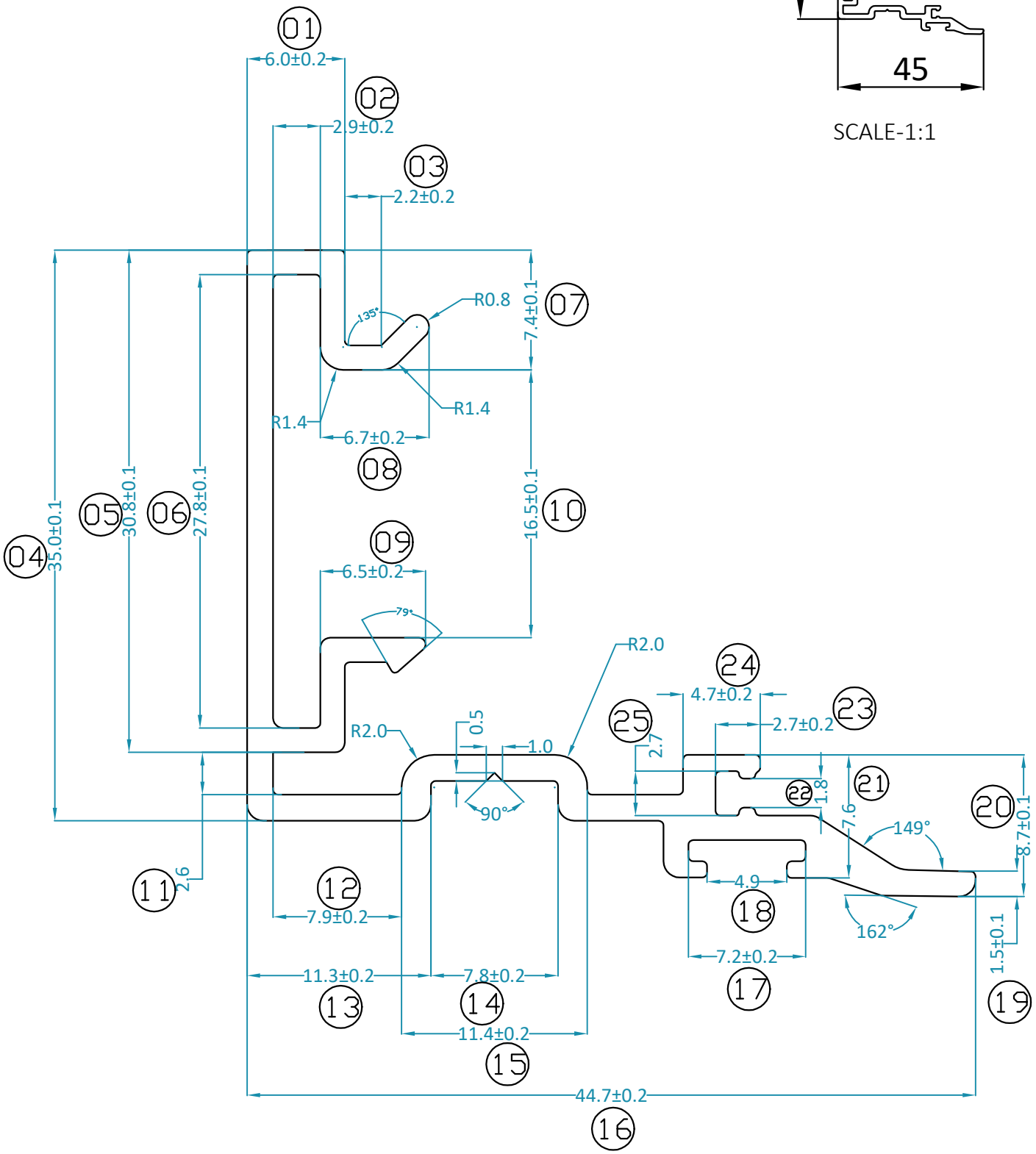

SCALE-5:1

Description	INTERLOCK				
PART CODE	A31AU002				
Material	ALUMINIUM 6063-T6	I xx value	260938.75 mm4	Unspecified tolerance	±0.3 mm
Colour / Finish	MILL FINISH	I yy value	86992.15 mm4	Unspecified radii R	1.0 mm
Total area	201.578 mm2	Outer wall thickness	1.2±0.2 mm	Unspecified radii r	0.5 mm
Total Weight (MGW)	0.544 KG/Mtr	Main wall thickness	1.2±0.2 mm	Drawn by	RD
Length	5.8Mtr	Inner wall thickness	1.2±0.3 mm	Drawing date	2025.05.15
Scale 1:1,5:1		Angular tolerance	90°±0.5°	Drawing issue	A