ADI FACADE
ASHOO DECOR (INDIA)
A DIVISION OF ALUMINIUM ARCHITECTURAL PRODUCTS
1729, HSIIDC, RAI INDL.
AREA SONIPAT-131029
9811047752
ashoodecorindia@yahoo.com
ashoodecor@yahoo.com

R = 0.50mm Radius
R1 = 1.0mm Radius
V = 1.50mm Radius

ALUMINIUM DIE DRAWING

TRANSOM

Q00817

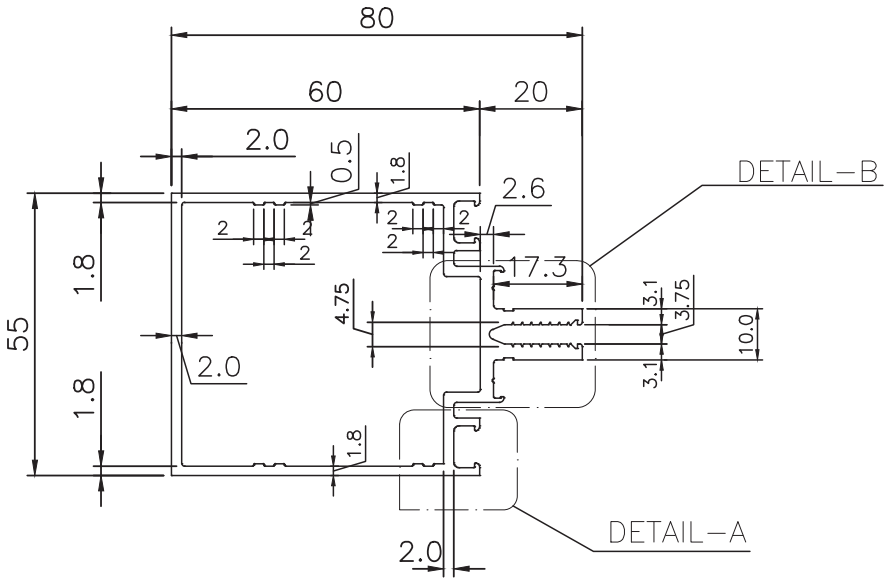

SCALE:- 1:1
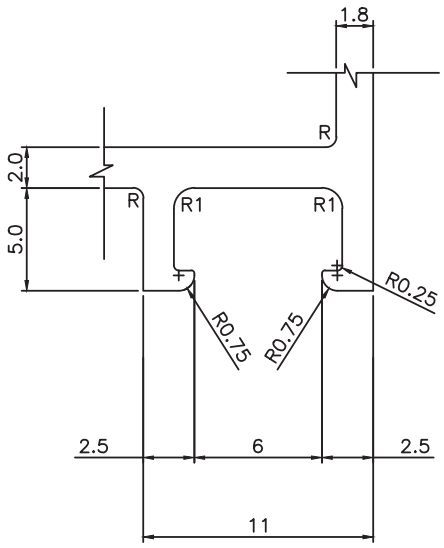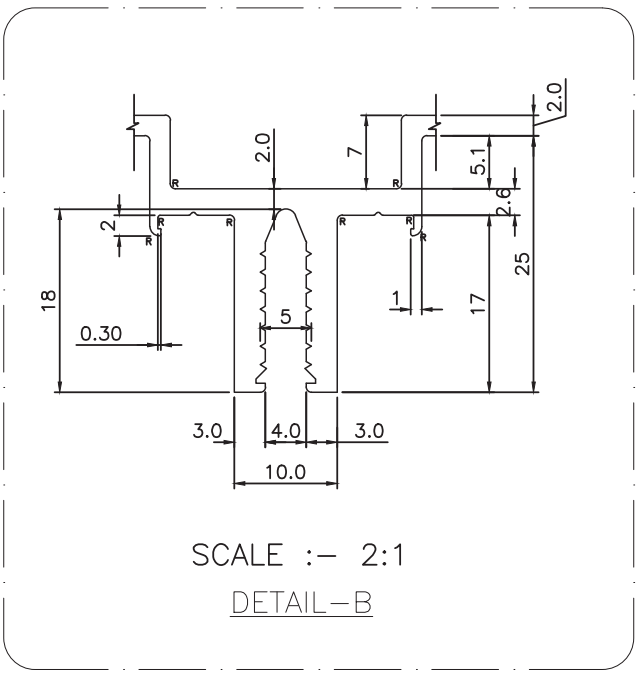
WEIGHT RANGE = 1.62 Kg/Mtr.