Title:-	FLUX Pro & FS Profiles
Dwg.No.:-	Pro & FS Profile CAD Designs_21052024
Date:-	23-05-2024
Alloy & Tempering:-	6063 -T6
	Standard Length - 6000 mm.
	Natural Anodized

Q01961

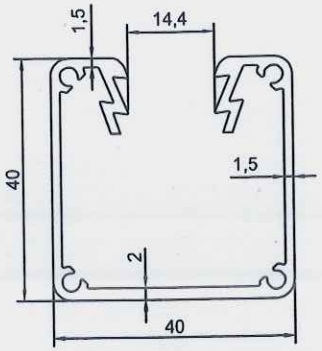

FLUX Pro 1.2

Q01962

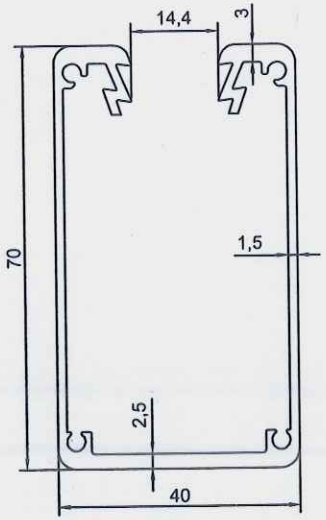

FLUX Pro 2.0

Q01963

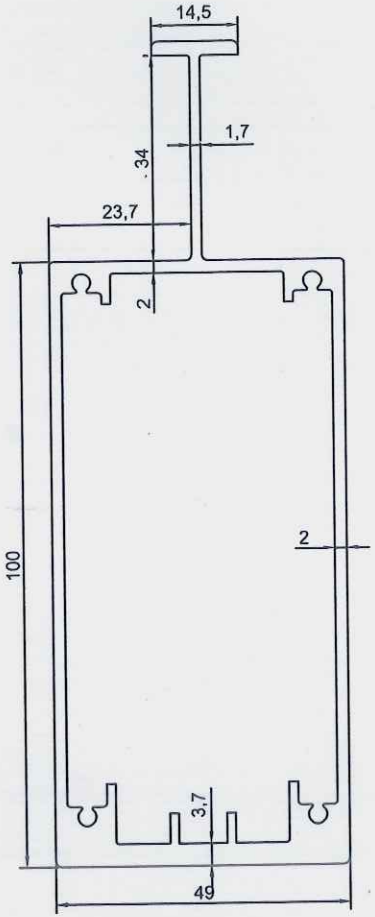

FLUX FS 4.0

Q01964

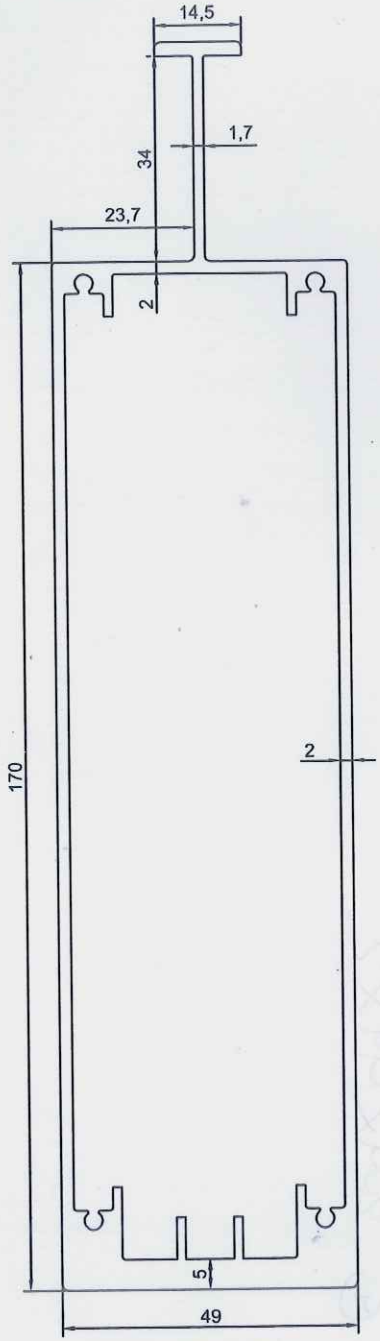

FLUX FS 6.0