Q03606

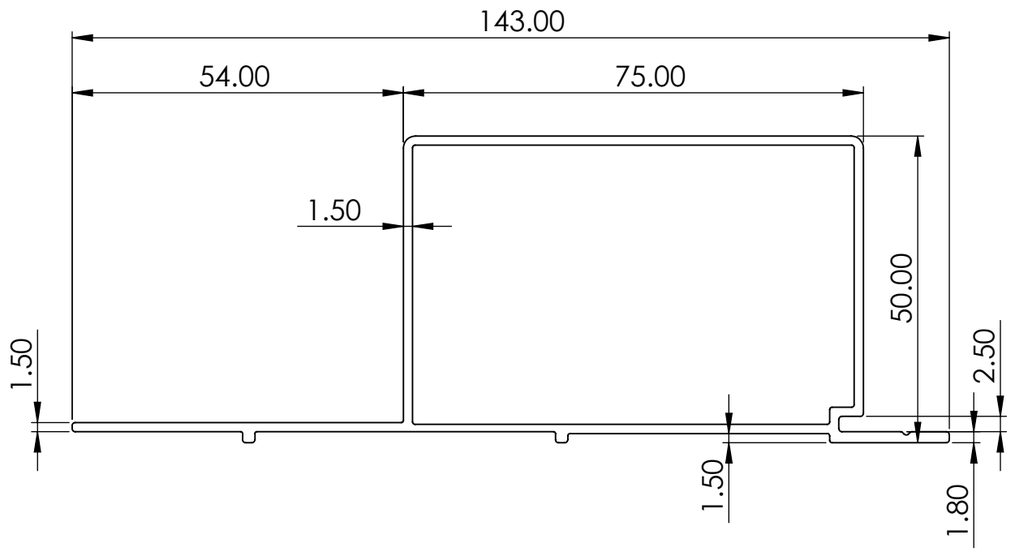

FINISH:	XXX	NAME	DATE	SITE NAME	XXX	TITLE:	EXT 50X75	REV:-
		SAMARTH	25/05/2025	SITE ADD:-	XXX			
UNLESS OTHERWISE SPECIFIED: DIMENSIONS ARE IN MILLIMETERS		CHK'D SAMARTH	25/05/2025	MATERIAL:				
		APPV'D		ALUMINIUM		DWG NO.	EXT 50X75 MODEL	00
		Q.A						
		DEBURR AND BREAK SHARP EDGES		WEIGHT:		SCALE:1:1	SHEET 1 OF 2	A3

THE INFORMATION CONTAINED IN THIS DRAWING IS THE SOLE PROPERTY OF FACADIEFY. ANY REPRODUCTION IN PART OR AS A WHOLE WITHOUT THE WRITTEN PERMISSION OF FACADEFY IS PROHIBITED.

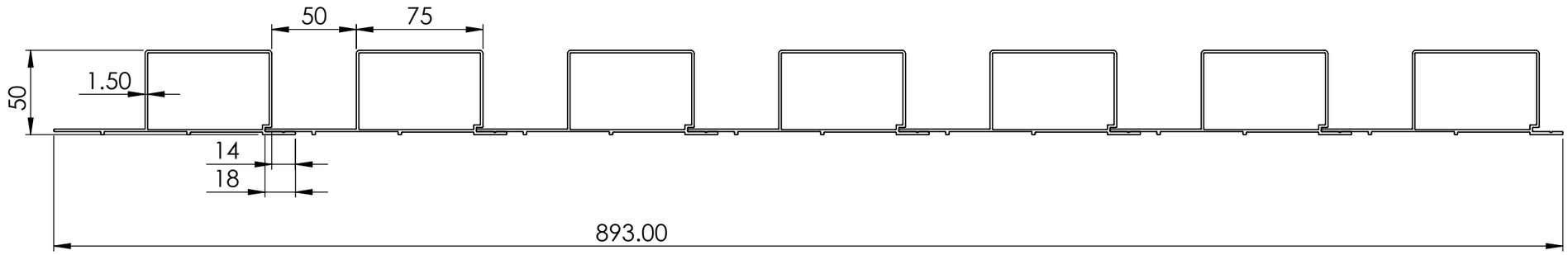

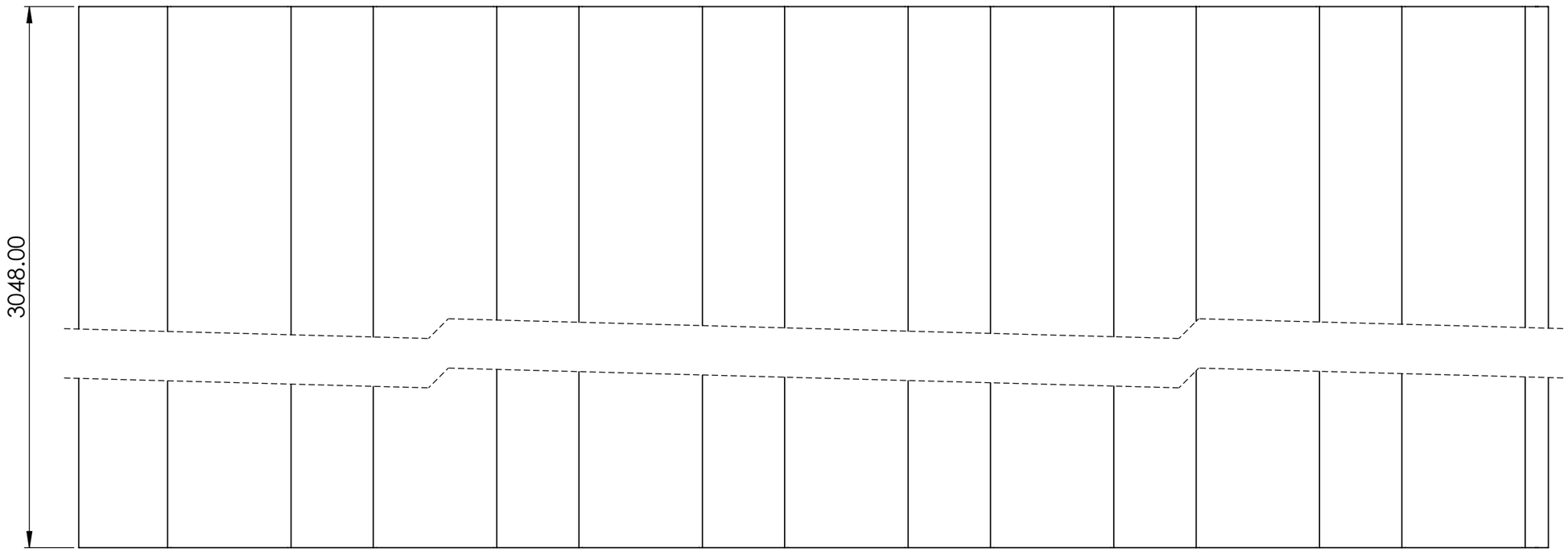

FINISH:	XXX	NAME		DATE	SITE NAME	XXX	TITLE:	EXT 50X75	REV:-
			SAMARTH	25/05/2025	SITE ADD:-	XXX			
UNLESS OTHERWISE SPECIFIED: DIMENSIONS ARE IN MILLIMETERS		CHK'D	SAMARTH	25/05/2025	MATERIAL:		DWG NO.	EXT 50X75 MODEL	00
		APPV'D			ALUMINIUM 6063 T6				
		Q.A							
		DEBURR AND BREAK SHARP EDGES			WEIGHT:		SCALE:1:3	SHEET 2 OF 2	A3

THE INFORMATION CONTAINED IN THIS DRAWING IS THE SOLE PROPERTY OF FACADIEFY. ANY REPRODUCTION IN PART OR AS A WHOLE WITHOUT THE WRITTEN PERMISSION OF FACADEFY IS PROHIBITED.