All dimensions are in mm. | IF IN DOUBT, PLEASE ASK

GENERAL TOLERANCES WHERE NOT SPECIFIED AS PER ISO 8062-3: 2007(E) (DCTG-10)														
NOMINAL DIM.(mm)	0-10	10-16	16-25	25-40	40-63	63-100	100-160	160-250	250-400	400-630	630-1000	1000-1600	1600-2500	2500-4000
TOL.	2	2.2	2.4	2.6	2.8	3.2	3.6	4	4.4	5	6	7	8	9

AS THE DEFAULT CONDITIONS FOR THE DIMENSIONS, THE CASTING TOLERANCE SHALL BE SYMMETRICALLY DISPOSED WITH RESPECT TO THE NOMINAL DIMENSION, I.E. WITH ONE HALF ON THE POSITIVE SIDE AND ONE HALF ON THE NEAGTIVE SIDE.

Q03629

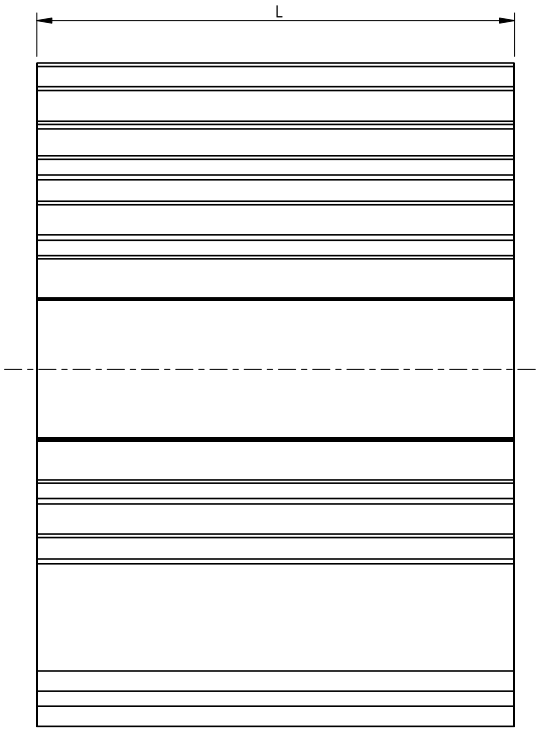

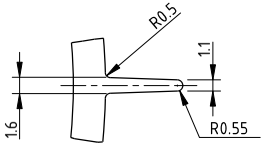

DETAIL A
SCALE 2:1

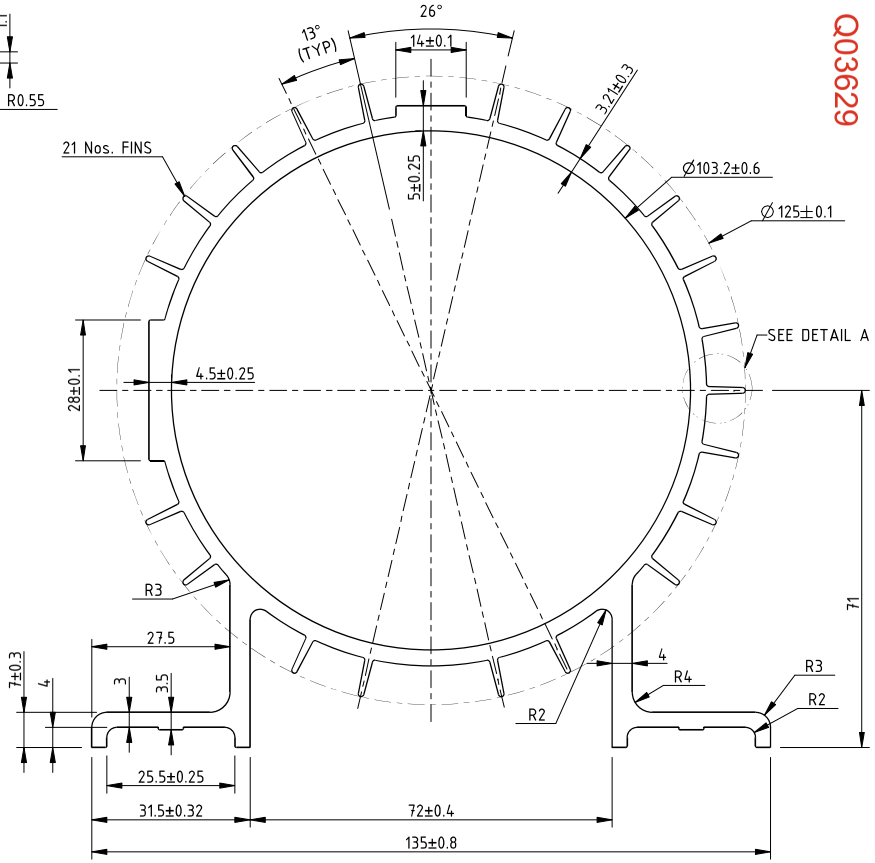

S. No.	*SAP CODE	CUT TO LENGTH L +1.5/-0	NET WEIGHT (KG)
1	CALCMFX032	95.0	.468

NOTE:
1.CUT TO LENGTH TAPER SHOULD BE LESS THEN 0.5 MM.
2.BORE OVALITY SHOULD BE LESS THEN 0.2 MM.
3.STRAIGHTNESS = 1.5 MM/MTR.
4.UNSPECIFIED CORNER RADIUS : 0.40 MM.
5.100% MANDREL PASSING SHOULD BE ENSURED.
6.CUT TO LENGTH SHOULD BE MAINTAIN AT MEAN.

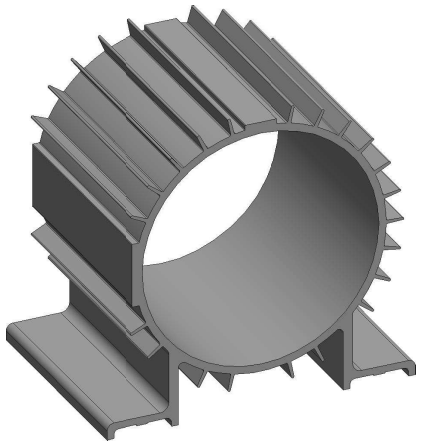

REV. NO.	ECN.NO.	AMENDMENTS	DATE	DRN	CHKD.	APPD.
			13/05/2024	ANIMESH	GAURAV	A.AKOLE

Critical To Quality Characterstic (CTQ)

MATERIAL\GRADE\SPEC : AL ALLOY: 6063-T6 ISO 6362-2 : 2004

GENERAL TOLERANCES : AS PER ISO 8062-3:2007(E) DCTG10

PROJECTION | SCALE: NTS

GROSS WT. : Kg | NET Wt : *REFER TABLE Kg

FINISH/COLOUR : | SURFACE AREA : cm^2

DEV DRG NO : HP_HSG_EXT_0873 | QTY/ASSY : | PARENT ASSLY. :

PROJECT: EXTRUDED HOUSING 71 FRAME | STATE : In Work

SUPERSEDES: | DRG. NO. : CALCMFX032

TITLE :EXTRUDED RAW HOUSING 71 FRAME L-95 MM | REV. NO. 00 | ISSUE NO. 00 | SHEET 1/1 | FORMAT : A3

HAVELLS

HAVELLS INDIA LTD.
Centre for Research & Innovation (CRI)
QRG Towers, 2D, Sector-126
Noida - 201 304 UP (India)

FILE PATH /Products/CMNA002_PUMP CAD DATA/Phase 3_Detailed Design/02.Major Parts/04.HOUSIN

Do not scale the drawing unless otherwise specified.
Remove burrs & sharp corners unless specified.

This drawing is the sole property of HAVELLS INDIA LTD. Unouthorised use of this drawing, information disclosing, loan, copying, using for sub contracting, tendering or any other misuse is not permitted.

[w.e.f 01-11-2018]