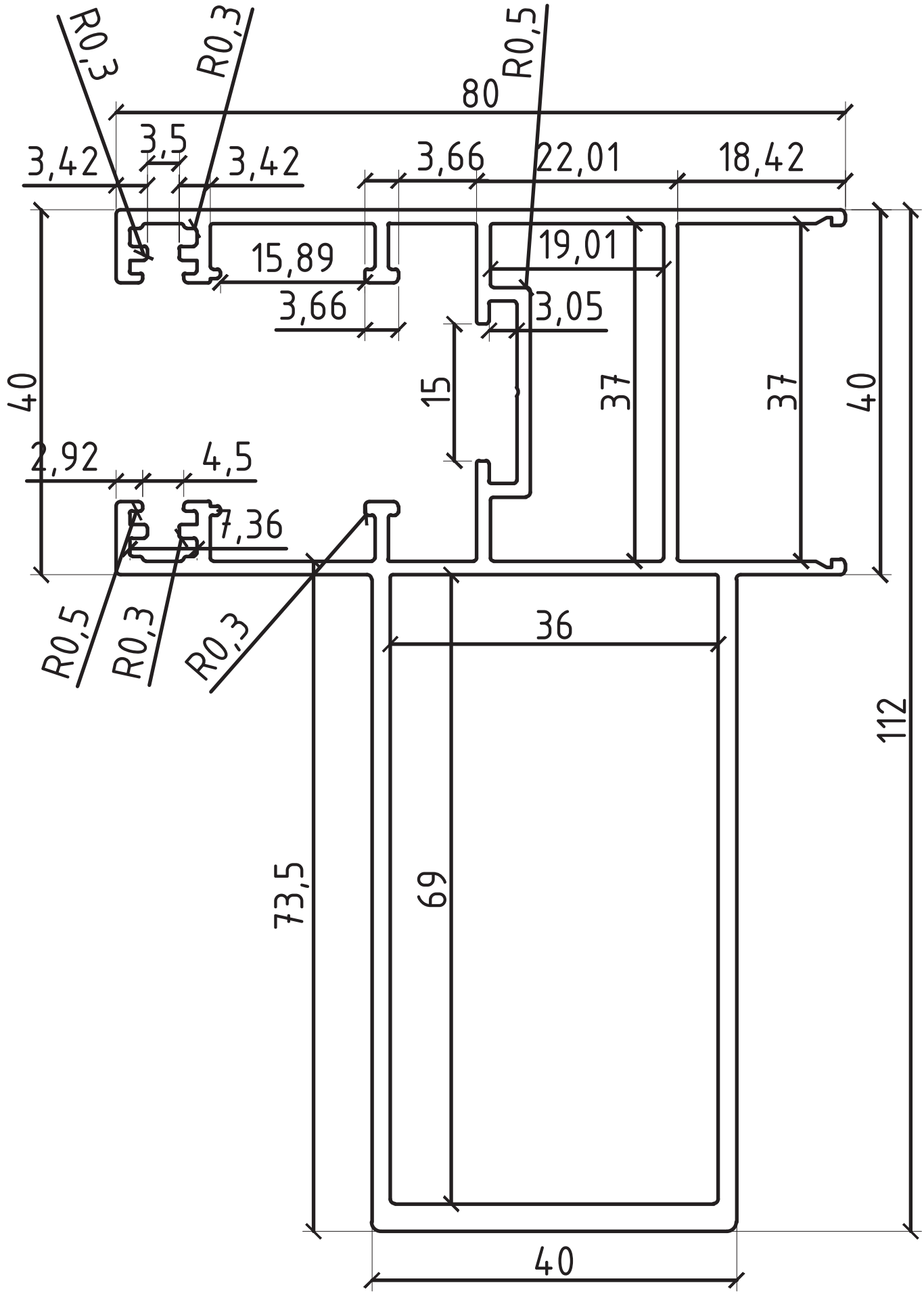

Shutter Frame With Hurricane Bar