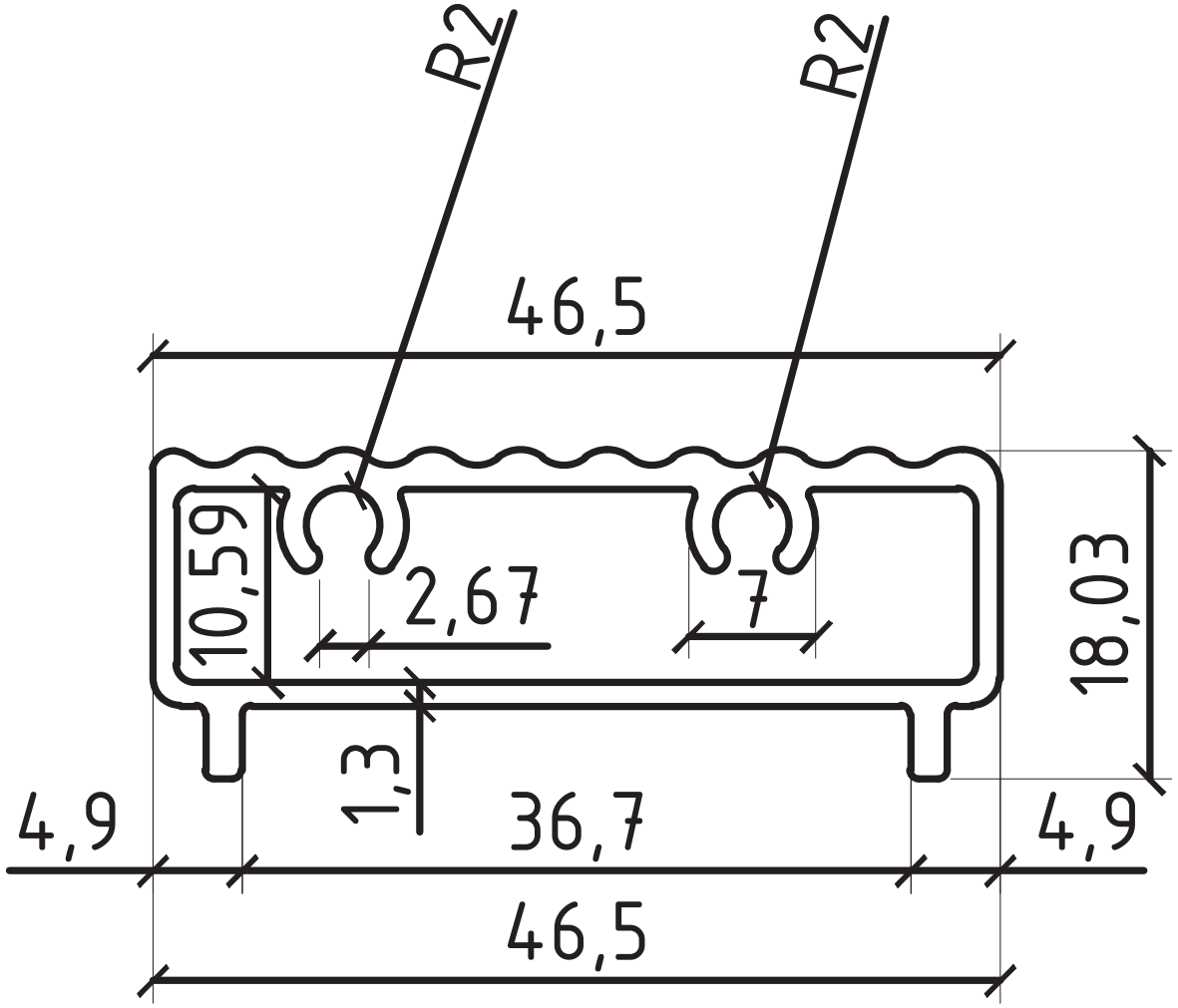

Threshold