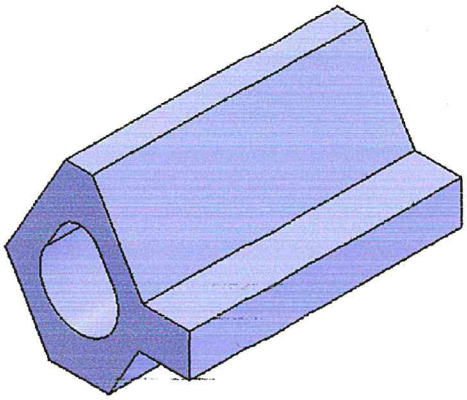

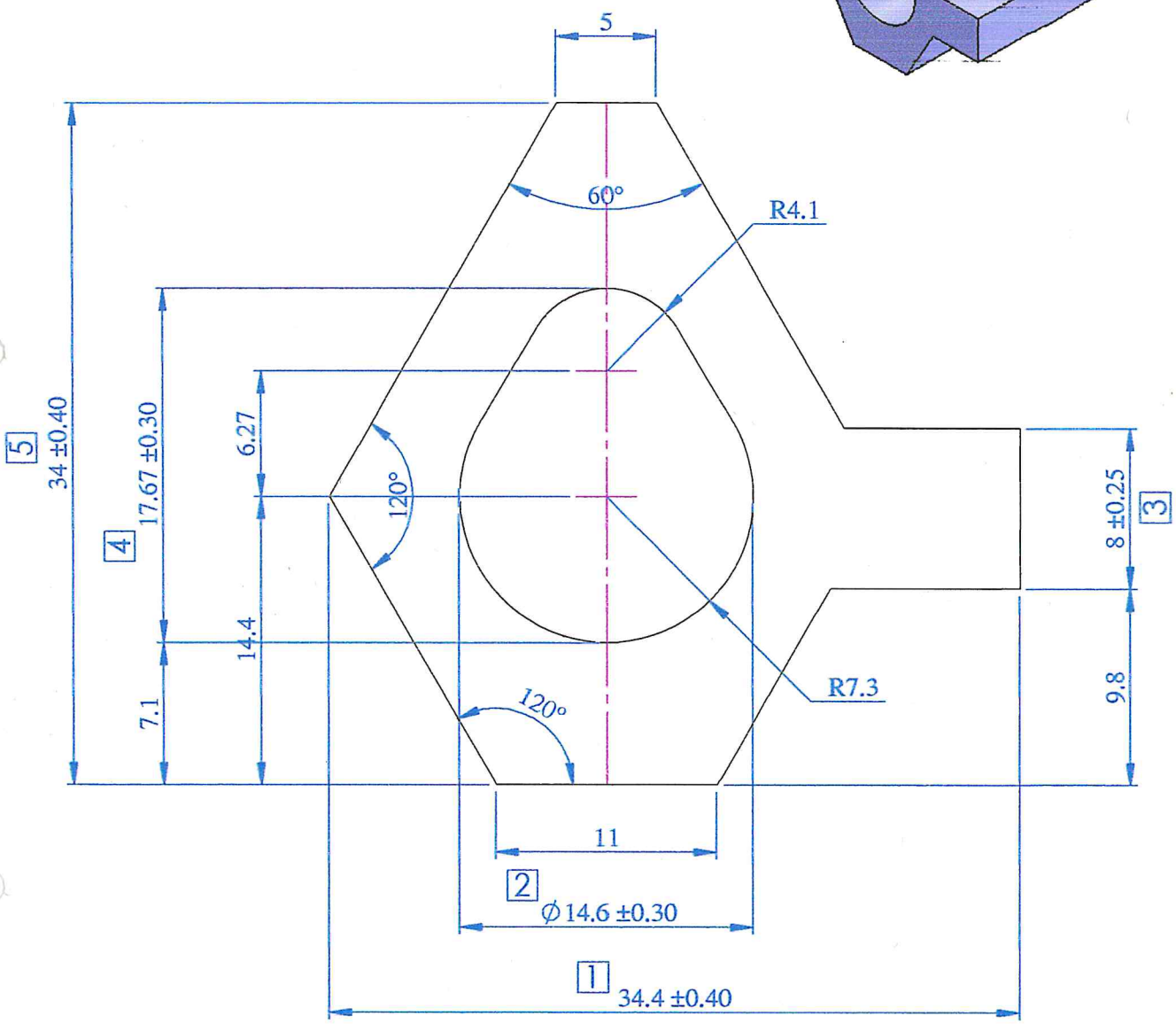


LOCATION:-
ALL DIMENSION ARE IN mm.
UNSPECIFIED CORNER RADIUS:0.40

PLEASE SPECIFY THE EXPOSED SURFACE

TOL. AS PER BS EN 755-9:2008
UNLESS SPECIFIED

TWIST=±1/4°/300 M.M./M.
FLATNESS= WIDTH X 0.005mm.
STRAIGHTNESS= 1.50 M.M./MTR.
ANGULARITY=±1.5°

## INDO ALUSYS INDUSTRIES LIMITED BHIWADI RAJASTHAN - 301019

| | | | | | | | | | |
|---|---|---|---|---|---|---|---|---|---|
| PARTY SAMPLE & DRG. | DRG. | PARTY NAME | M/S INDOSAW | | | | REF:– AS PER EMAIL ON Dt.-21.08.15 | | |
| | | | | DRAWN | DHARMVIR | 22.08.15 | AREA | 470.40 | MM² |
| | | | | CHECKED | | | WEIGHT | 1.270 | KG/M |
| | | | | APPROVED | 26/11/15 | | WT. RANGE | ------- | Kg/1 |
| | | | | SCALE | 1:1 & 2:1 | DATE | ALLOY | 6063-T6 | |
| 00 | (REF.) | | | CRITICAL DIM. | * | | MAL NO | 15118 | |
| REV. STATUS | REV. NO. | DESCRIPTION | SIGN DATE | PERIMETER | INT. | 50.03 | SEC.NO. | D-6533 | |
| A4 | | REVISION | | | EXT. | 111.44 | | | |