REVISIONS				
ZONE	REV.	DESCRIPTION	DATE	APPROVED

Q03808

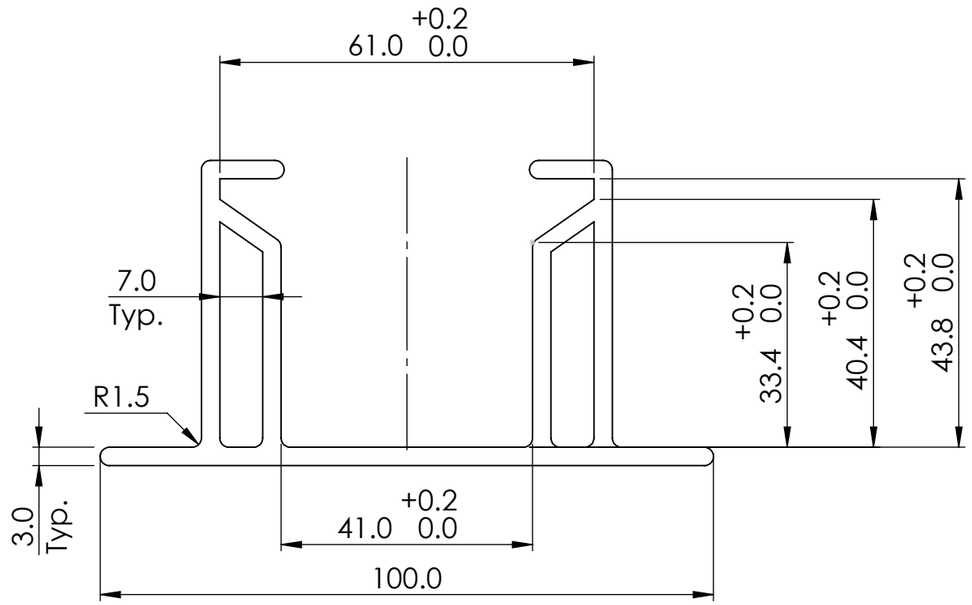

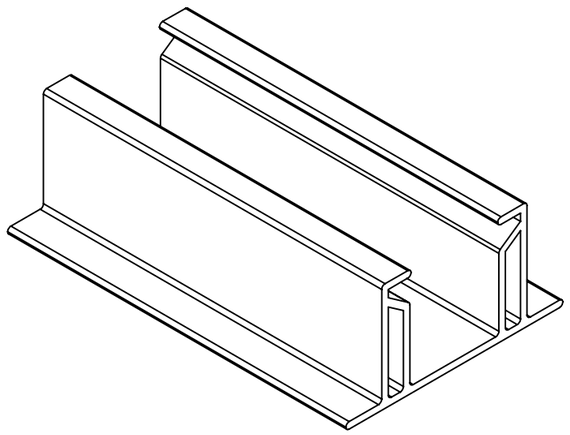

SCALE 1 : 2

PARTS LIST (OR BILL OF MATERIALS)

UNSPECIFIED FILLET RADIUS 0.5 max
UNSPECIFIED CHAMFER 0.5 max
BREAK SHARP EDGES 0.5 max

GENERAL TOLERANCES
0 - 30 ±0.2
30 - 500 ±0.3
500 - 1000 ±0.5
1000+ ±1
ANGLES: ±0.5°

THE INFORMATION CONTAINED WITHIN THIS DOCUMENT IS PROPRIETARY AND NO PORTION OF THIS DOCUMENT MAY BE COPIED,USED OR DISCLOSED FOR ANY PURPOSE EXCEPT AS AUTHORIZED IN WRITING BY AIRTOUCH.

airtouch

FIRST ANGLE PROJECTION

SURFACE FINISH XX N12

FINISH: CLEAR ANODIZE

MATERIAL: 6063-T5

DESCRIPTION: **outer-tube**

REV 00

APPROVAL	NAME	DATE	SIGN.
DESIGN	SHAY B.	14/08/2024	
DRAWN	SHAY B.	14/08/2024	
APVD	SHAY B.	14/08/2024	

SIZE **A3** DWG. # **170-101-2052**

PROJECT:

SCALE: 1:1 DIMENSIONS ARE IN mm SHEET 1 OF 1

Last saved by YosefCohen, at 12/12/2024 13:53:34