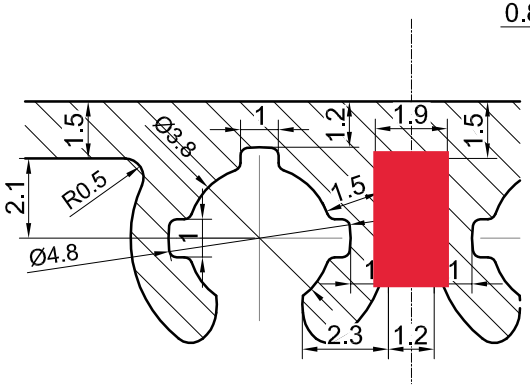

Detail B
(Scale 5:1)

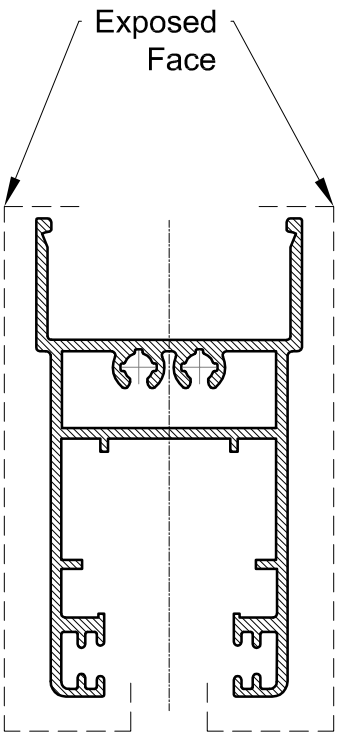

Scale 1:1

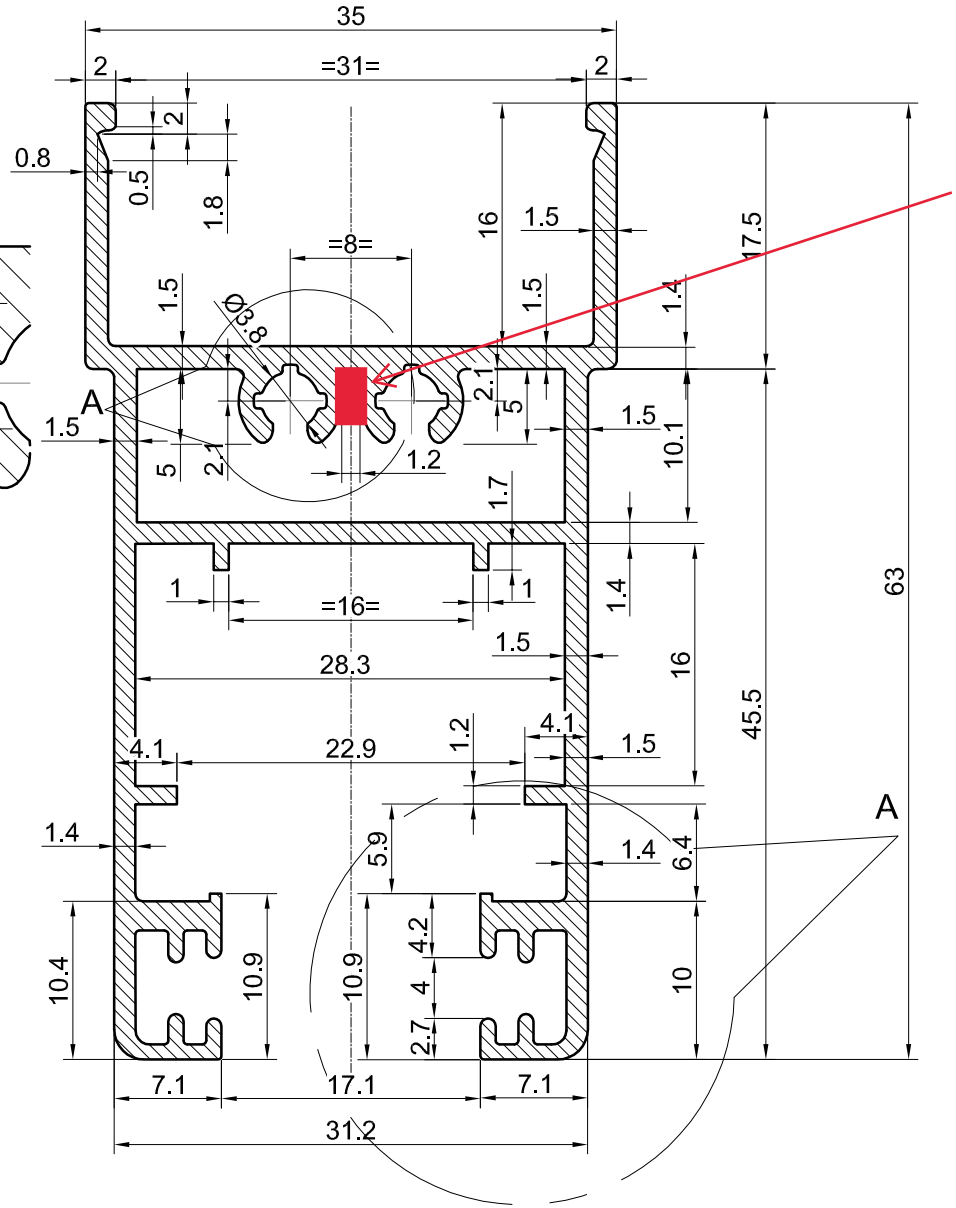

Scale 2:1

THIS GAP
WILL
FILLED

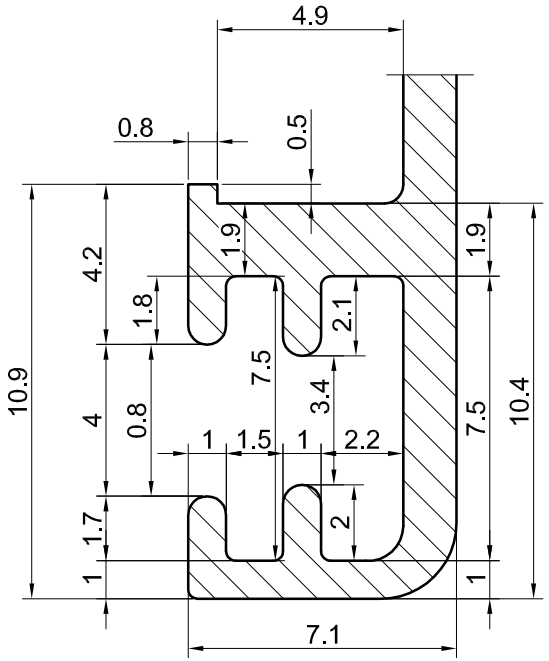

Detail A
(Scale 5:1)

Special Feature:-
1. Anodizable.
2. No Machining
3. To Bend- No
4. Alloy & Temper - 6063 T6

W - 0.980 Kg/Mtr

Cut Length :- To be Finalized

Material.- —		Qty- —	Extrusion Aluminium Sash Horizontal GS24			
Customer XXXX			Project XXX			
GSC Alusystems Private Ltd Plot 41, Sector Ecotech-1, Extension-1 , Greater Noida, Gautam Buddha Nagar UP India Pin 201310			Print: Draft	Drg No: M33553		
	Drawn By AKS	Date 22/11/2023	Version Rev.B4	Scale 1:!	Format A4	Sheet 1/1
	File: \\ax2\AX\Alusystems\ALUSYSTEM DEVLOPEMENTS\Extrusion Drawing VENDOR CONVERSATION\2					