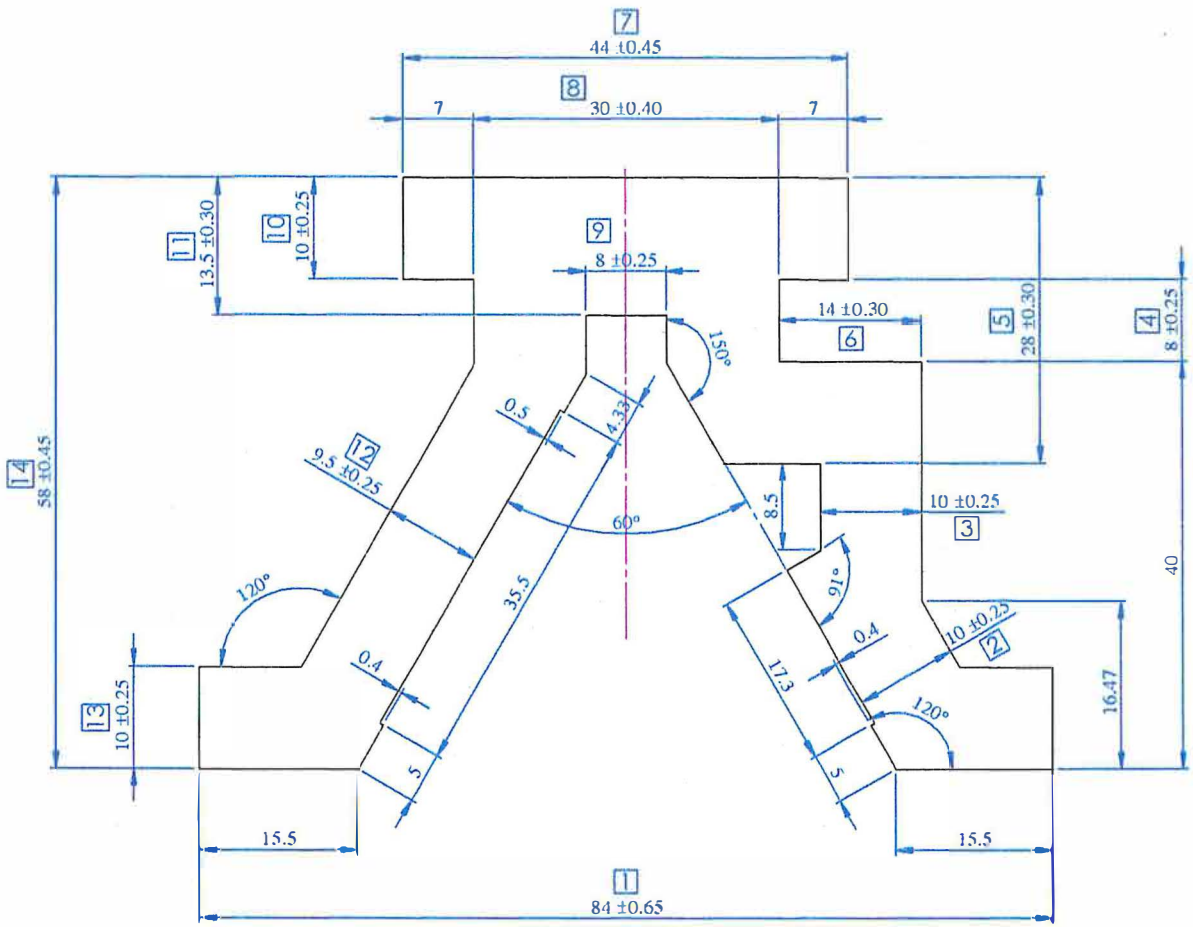

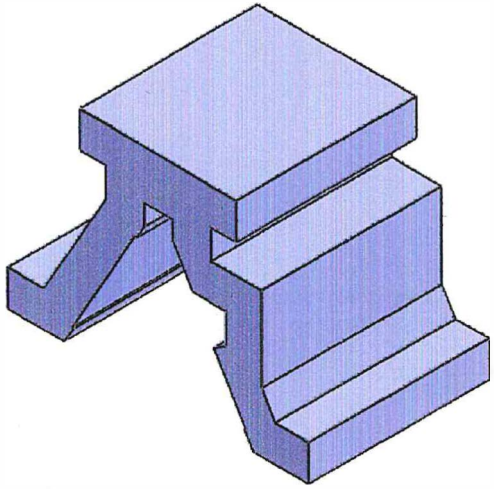

LOCATION:-P1 - 1HOLE
ALL DIMENSION ARE IN mm.
UNSPECIFIED CORNER RADIUS:0.40

PLEASE SPECIFY THE EXPOSED SURFACE
TOL. AS PER BS EN 755-9:2008
UNLESS SPECIFIED

TWIST=±1/4°/300 M.M./M.
FLATNESS= WIDTH X 0.005mm.
STRAIGHTNESS= 1.50 M.M./MTR.
ANGULARITY=±1.5°

JINDAL ALUMINIUM LIMITED BHIWADI RAJASTHAN - 301019

PARTY SAMPLE & DRG.	DRG.	PARTY NAME	M/S INDOSAW				REF:- AS PER EMAIL ON Dt.-21.08.15		
				DRAWN	DHARMVIR	27.08.15	AREA	1781.18	MM²
				CHECKED			WEIGHT	4.809	KG/M.
				APPROVED		26/11/15	WT. RANGE	-------	Kg/12
				SCALE	1:1 & 2:1	DATE	ALLOY	6063-T6	
00	(REF.)			CRITICAL DIM.	*		MAL NO	15125	
REV. STATUS	REV. NO.	DESCRIPTION	SION DATE	PERIMETER	INT.		SEC.NO.	D-6534	
A3		REVISION			EXT.	363.59			