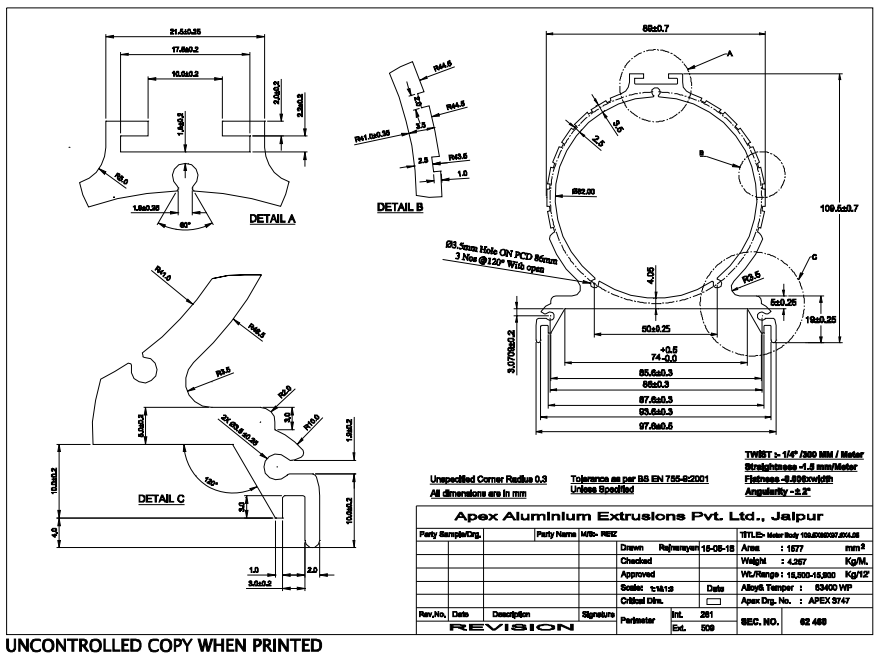

UNCONTROLLED COPY WHEN PRINTED

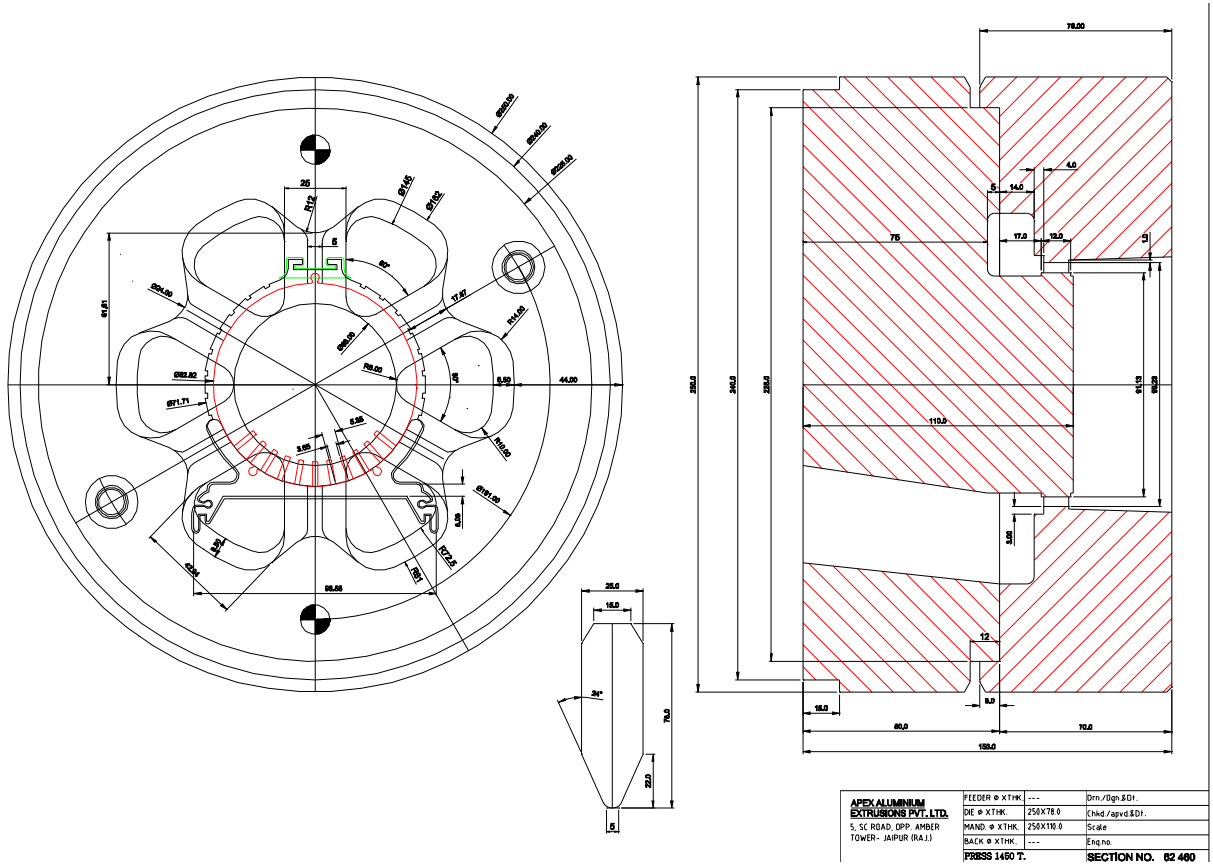

APEX ALUMINIUM EXTRUSIONS PVT. LTD.	FEEDER Ø XTHK.	---	Drn./Dgn.&Dt.
5, SC ROAD, OPP. AMBER TOWER- JAIPUR (RAJ.)	DIE Ø XTHK.	250X78.0	Chkd./apvd.&Dt.
	MAND. Ø XTHK.	250X110.0	Scale
	BACK Ø XTHK.	---	Eng.no.
	PRESS 1450 T.		SECTION NO. 62 460