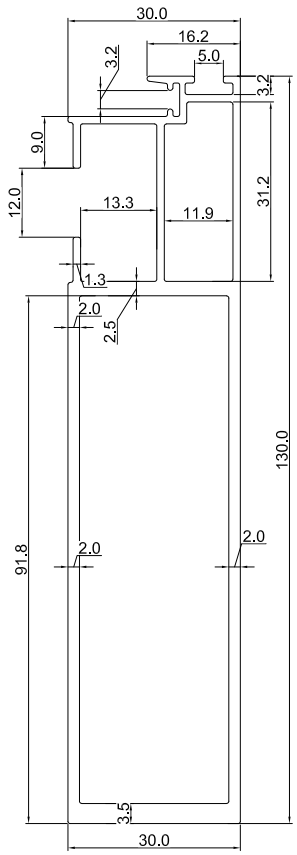

Q01174

Alum Extruded Outer Frame
Profile No:- AA-01
Weight.- 1.869 **Kg/ Rmt**

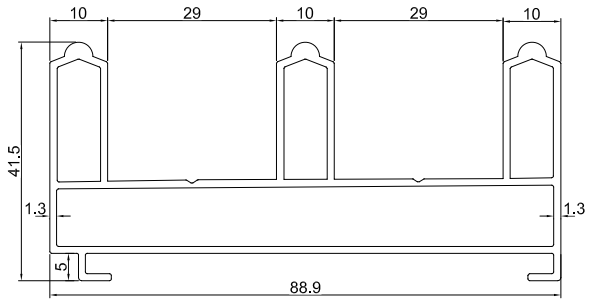

Q01172

Alum Extruded Outer Frame
Profile No:- AA-02
Weight.- **1.288 Kg/ Rmt**

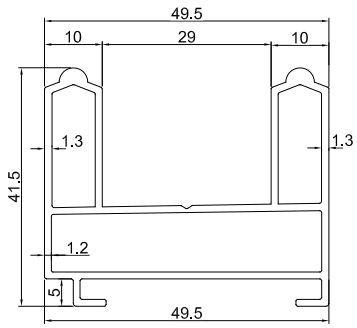

Q01173

Alum Extruded Outer Frame
Profile No:- AA-03
Weight.- **0.829 Kg/ Rmt**

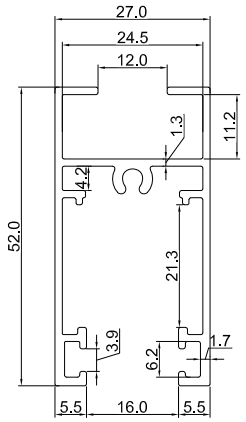

Q01175

Alum T/B Shutter
Profile No:- AA-04
Weight.- **0.667 Kg/ Rmt**

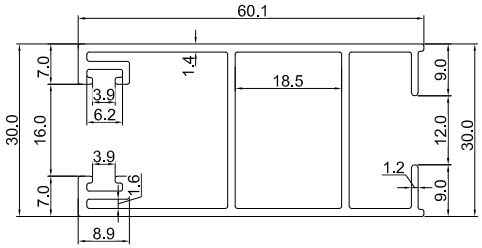

Q01176

Alum Vertical Shutter
Profile No:- **AA-05**
Weight.- **0.826 Kg/ Rmt**

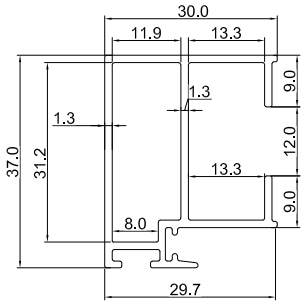

Q01177

Alum Interlock-01
Profile No:- **AA-06**
Weight.- **0.535 Kg/ Rmt**