LTR	REVISIONS			
CN NUMBER	DATE	ORIGINATOR	REVIEWER	CN APPR
RELEASES				
NPI/DESIGN	STATIONARY	MANUFACTR	MAUSTER	SWORNY

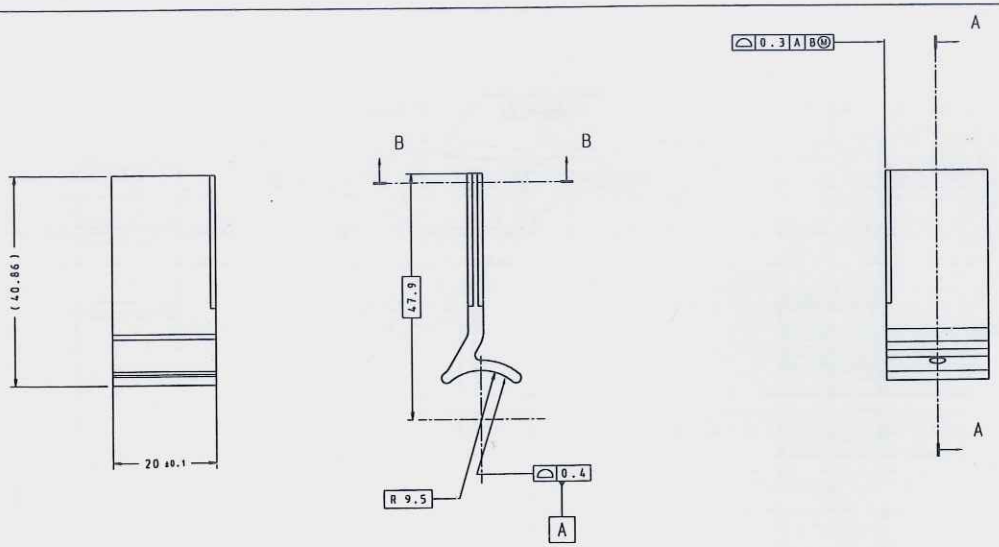

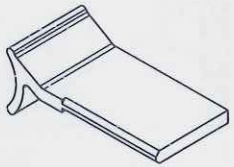

ISOMETRIC VIEW

Q02312

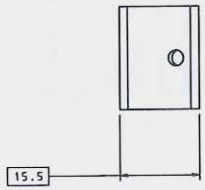

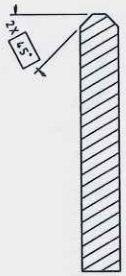

SECTION B
SCALE 5:1

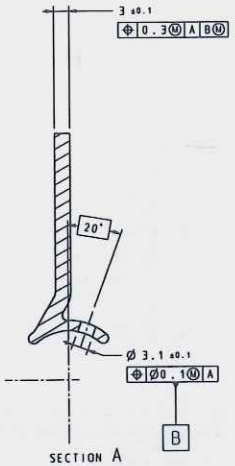

SECTION A
SCALE 2:1

UNLESS OTHERWISE STATED:

DIMENSIONING AND TOLERANCING IN ACCORDANCE WITH ASME Y14.5-2018

FOR PURPOSES OF GEOMETRIC TOLERANCING ALL DIMENSIONAL INFORMATION CONTAINED IN THE CAD MODEL IS BASIC

UNTOLERANCED DIMENSIONS ARE BASIC 0.5 A B M

ALL UNSPECIFIED INSIDE RADII AT LEAST 0.5mm

MATERIAL: A6005; MS-A96005MX-BR001 TYPE A OR TYPE B

MUST BE FREE FROM BURRS AND SHARP EDGES.
PART SHALL BE CLEAN, FREE FROM ALL CONTAMINANTS (INCLUDING OIL).
SURFACE TENSION 36mN/m OR GREATER.

ENGINEERING APPROVAL OF SAMPLES FROM EACH SUPPLIER IS REQUIRED PRIOR TO AUTHORISATION OF PART PRODUCTION

ENGINEERING APPROVAL OF FIRST PRODUCTION SHIPMENT FROM EACH SUPPLIER IS REQUIRED PRIOR TO AUTHORISATION FOR USE

CHANGES AFFECTING DESIGN COMPOSITION OR PROCESSING OF THE PART PREVIOUSLY APPROVED FOR PRODUCTION REQUIRE PRIOR APPROVAL FROM HANON SYSTEMS PRODUCT ENGINEERING

FOR CURRENT RELEASE STATUS SEE THE HANON SYSTEMS ENGINEERING NOTICE.

COMMON INFORMATION

1. THIS DRAWING AND ANY INTELLECTUAL PROPERTY RIGHTS THEREIN ARE PROPERTY OF HANON AND MUST NOT BE COPIED AND TRANSFERRED UNDER PATENT RIGHTS.
2. THIS DRAWING OR TECHNICAL INFORMATION CONTAINED IN IT MUST NOT BE USED FOR OTHER PURPOSES.
3. THE PARTS MANUFACTURED IN ACCORDANCE WITH THIS DRAWING SHOULD NOT BE USED OR SUPPLIED WITHOUT HANON'S APPROVAL.
4. PARTS MANUFACTURED UNDER THIS DRAWING MUST BE THE SAME AS PREVIOUSLY MADE PARTS AND MUST NOT BE COPIED OR TRANSFERED UNDER THE ABOVE ALL OR ANY PATENTS AND QUALITY ASSURANCE, SAME.
5. A PERSON SHOULD NOT USE DRAWINGS AND DESIGN INFORMATION AS LICENSED BY HANON DRAWING WITH HANON AND CHANGE THAT IS NOT MADE TO HANON SHOULD BE DISCUSSED AND AGREED TO BEFORE ANY PARTS ARE PRODUCED.
6. DRAFTED IN ACCORDANCE WITH HANON ENGINEERING STANDARD (ATP 10-01).
7. IN THE OTHERS, NON-TARGET, HANON REVISION AND APPLICABLE SAME INSTANCES SUSTAINING MANAGEMENT STANDARDS.
8. THE TOOLING SUPPLIER SHOULD EXPRESS THE HANON CONTINUATION OF HANON TO ENTERPRISE WITHIN 5 DAYS AFTER RECEIVING DRAWING, TO TOOL INSPECTION REVISION REPORT & TOOLING DEVELOPMENT PLAN OR DESIGN CHANGE PROPOSAL (IF REQUIRED).

ORIGINATOR	DATE	CUSTOMER PART NUMBER	CUSTOMER VEHICLE NAME
MANUFACTR	20210303		FORD-TRANSIT V710/711
REVIEWER	DATE	OLD PART NUMBER	
MAUSTER	20210319	DESCRIPTION	
CN APPROVER	DATE		
SWORNY	20210323	PART NAME	
THIRDANGLE PROJ	CAD TYPE	BRKT-(A) COND MTG	
	DATUM VS REQ	PHASE	PART NUMBER	VERSION
SCALE 2:1	UNITS mm	PL	HC842G8P0A-01	00
SHEET 1/1	WEIGHT			
DWG VS MASTER	DWG SIZE A1	HANON SYSTEMS		

3D CAD FILE : CF-PLHC842G8P0A_DWG_001

3D CAD FILE : CF-PLHC842G8P0A/001