LTR	REVISIONS				
CN NUMBER	DATE	DESIGNATOR	REVIEWER	CN APPROVAL	
RELEASED					
NFL2233317-P	2021-04-23	THIRAMAGI	MAUSICA	SWOHNZ	
02AA ADDED DIM					
RELEASED PL HO842G8P1A-02					
NFL2133839	2021-11-23	MHRUCHAK	MAUSICA	SWOHNZ	
02BA DELETED FOLD AND DATUM C					
02BB CHANGED DIM HAS 53.0X					
02BC CHANGED DIM HAS 32.8					
NFL2164479	2022-03-03	MHRUCHAK	MAUSICA	SWOHNZ	

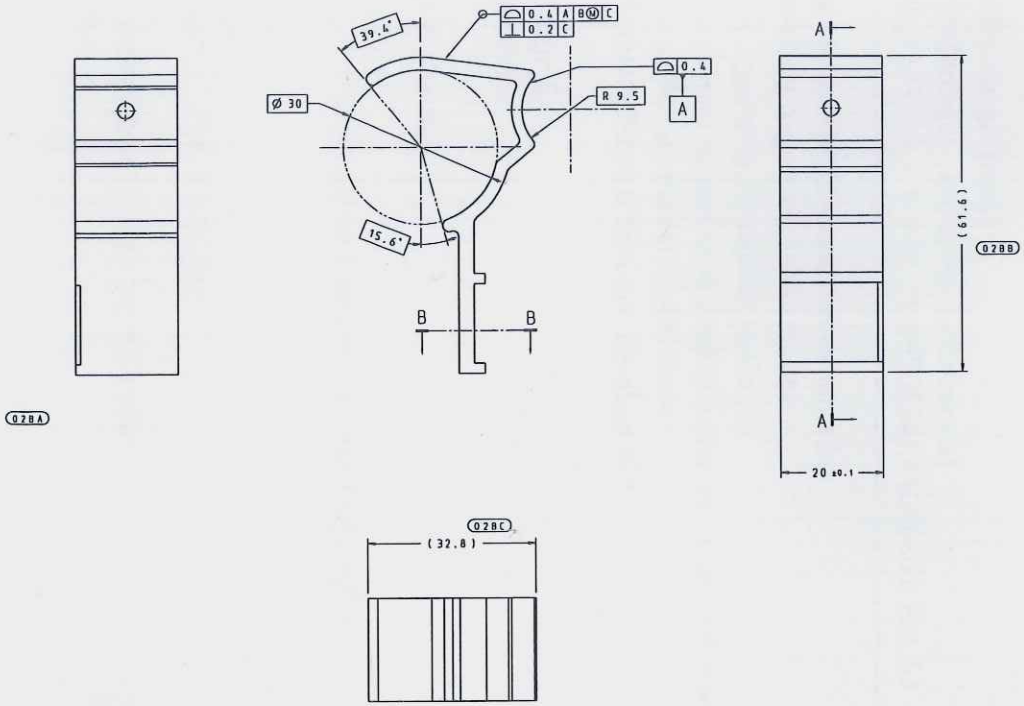

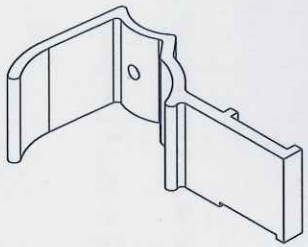

ISOMETRIC VIEW
SCALE 2:1

Q02313

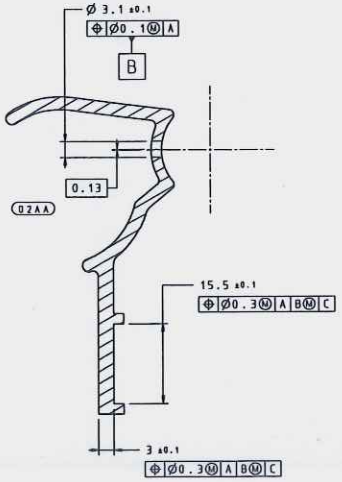

SECTION A
SCALE 2:1

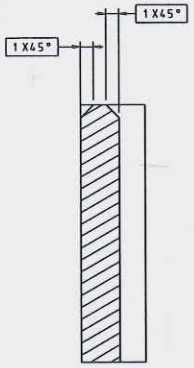

SECTION B
SCALE 5:1

UNLESS OTHERWISE STATED:

DIMENSIONING AND TOLERANCING IN ACCORDANCE WITH ASME Y14.5-2018

FOR PURPOSES OF GEOMETRIC TOLERANCING ALL DIMENSIONAL INFORMATION CONTAINED IN THE CAD MODEL IS BASIC

UNTOLERANCED DIMENSIONS ARE BASIC 0.5 A B M

ALL UNSPECIFIED INSIDE RADII AT LEAST 0.5mm

MATERIAL: A6005; MS-A96005MX-BR001 TYPE A OR TYPE B

MUST BE FREE FROM BURRS AND SHARP EDGES.
PART SHALL BE CLEAN, FREE FROM ALL CONTAMINANTS (INCLUDING OIL).
SURFACE TENSION 36mN/m OR GREATER.

ENGINEERING APPROVAL OF SAMPLES FROM EACH SUPPLIER IS REQUIRED PRIOR TO AUTHORISATION OF PART PRODUCTION

ENGINEERING APPROVAL OF FIRST PRODUCTION SHIPMENT FROM EACH SUPPLIER IS REQUIRED PRIOR TO AUTHORISATION FOR USE

CHANGES AFFECTING DESIGN COMPOSITION OR PROCESSING OF THE PART PREVIOUSLY APPROVED FOR PRODUCTION REQUIRE PRIOR APPROVAL FROM HANON SYSTEMS PRODUCT ENGINEERING

FOR CURRENT RELEASE STATUS SEE THE HANON SYSTEMS ENGINEERING NOTICE.

COPYRIGHT INFORMATION

1. THIS DRAWING AND ANY INTELLECTUAL PROPERTY RIGHTS THEREIN ARE PROPERTY OF HANON AND MAY NOT BE CHANGED UNDER PAPER ISSUE.
2. THIS DRAWING OR INFORMATION IS NEVERTHELESS MINIMUM OF SAFEGUARD EXPLANATION REQUIRED.
3. THE DEVELOPMENT IN ACCORDANCE WITH THIS DRAWING SHOULD NOT BE USED OR SUPPLIED WITHOUT HANON APPROVAL.
4. ANY PROPOSITION MADE BY YOU SHALL BE THE BASIS OF ESTIMATE MADE. ANY PRICE OFFER MADE BY US MAY BE CHANGED UNDER THE APPROVAL OF THE TESTER AND QUALITY ASSURANCE, ETC.
5. A PROGRAM THOUGH NOT IS CHANGING ANY LETTER ROUTINE AN LYCHRISE ALTHOUGH DRAWING AND DIMENSION AND CHANGE THAT THAT HAVE TO DIMENSIONAL DATUM BE DISCUSSED AND AGREED TO BEFORE ANY PARTS ARE PRODUCED
6. DRAWING IN APPROPRIATE WITH HANON ENGINEERING PRODUCTION DATE ISSUE
7. ALL DETAILS WITH CASTS, HANON, WITHOUT AND APPLICABLE DIM REFERENCE SUBSTANCE MANAGEMENT STANDARD
8. THE TOOLING SHALL BE ENDURING DURABILITY AND SUCH ACCORDING TO HANON ENGINEERING DRAWING LIMITS AFTER REFERENCE DRAWING. THE TOOL INCLUDING DESIGN REPORT 2. TOOLING DEVELOPMENT PLAN DESIGN CHANGE PROPOSAL IF REQUIRED.

DRAUGHTSMAN	DATE	CUSTOMER PART NUMBER	CUSTOMER-VEHICLE NAME
THIRAMAGI	2021-03-03		FORD-TRANSIT VT6/V711
REVIEWER	DATE	OLD PART NUMBER	
MAUSICA	2021-03-15	DESCRIPTION	
CN APPROVER	DATE	R/D CLIP MOUNT BRACKET	
SWOHNZ	2021-03-23	PART NAME	
THIRDANGLE PROJ	CAD TYPE	BRKT-(A) COND MTG	
	CATIA V5 R23	PHASE	PART NUMBER	VERSION
SCALE 2:1	UNITS mm	PL	HO842G8P1A-02	01
SHEET 1 OF 1	WEIGHT			
DWG IS MASTER	DWG SIZE A1	HANON SYSTEMS		

2D CAD FILE : CF-PLHO842G8P1A_DWG.002

3D CAD FILE : CF-PLHO842G8P1A1.002