Q01194

PROPOSED DRAWING
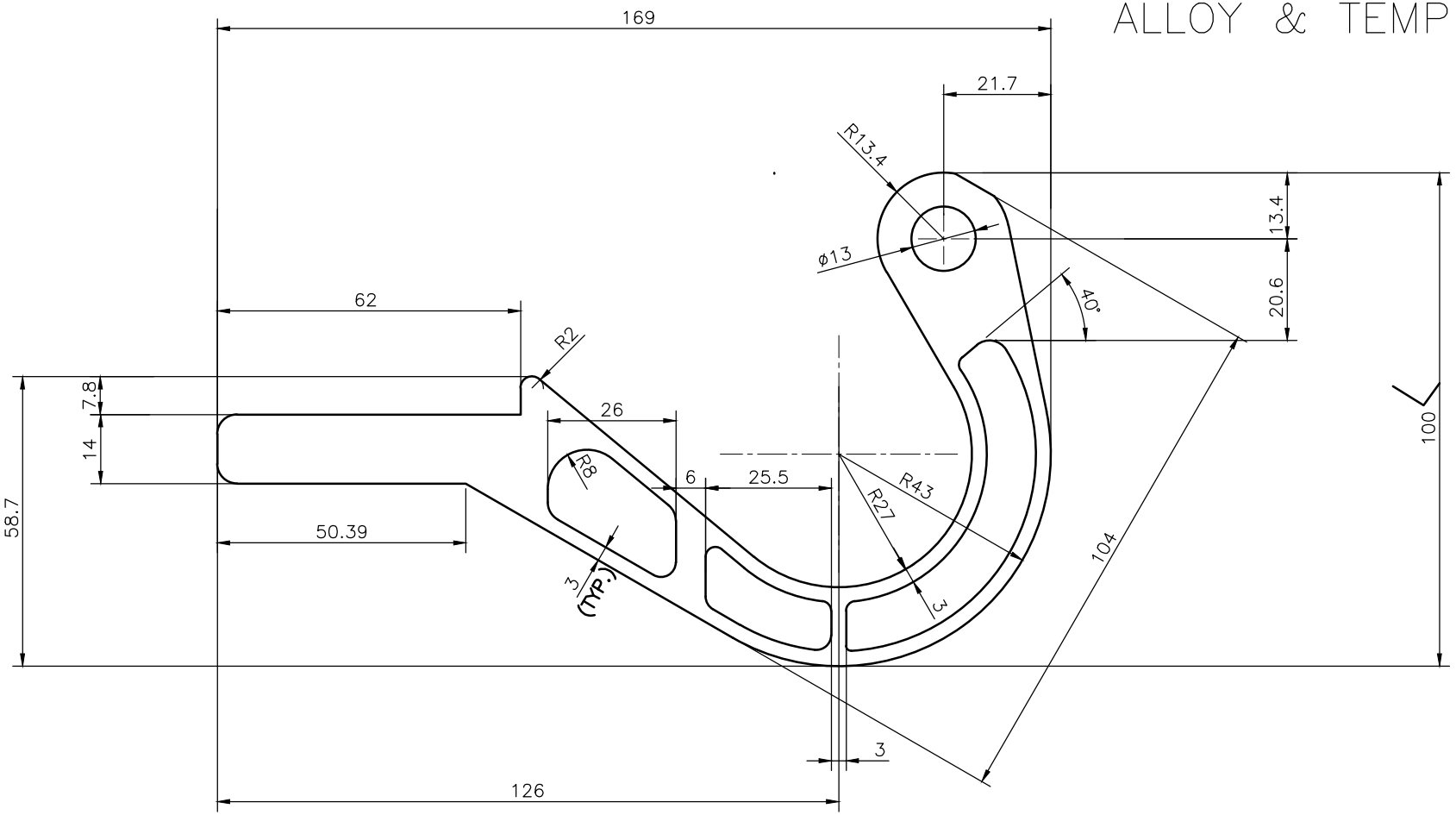
ALLOY & TEMPER 6005-T6