M/s. LUMINIOUS TECHNOLOGIES ALLOY 6005 76 ✓

PROPOSAL DRAWING

Φ02338

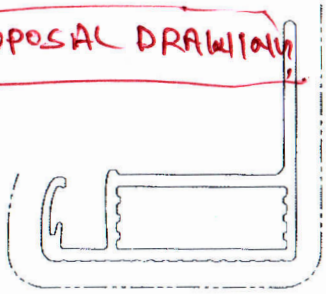

1:1

GB 5237.1-2017(High Precision)	
Size	Tolerance
≤3	±0.13
>3-10	±0.15
>10-15	±0.17
>15-30	±0.21
>30-45	±0.26
>45-60	±0.31
>60-100	±0.52

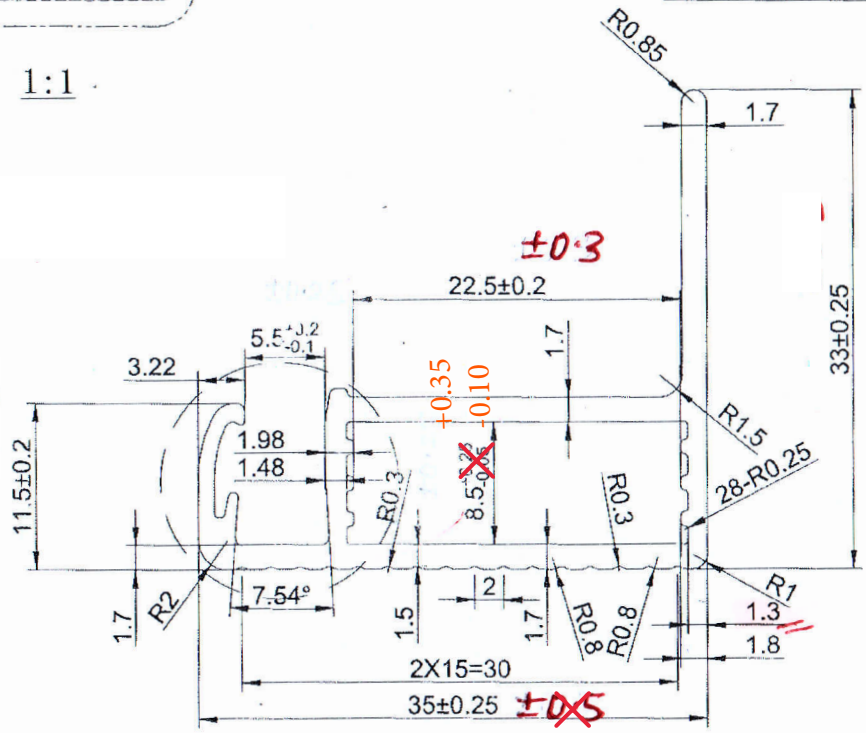

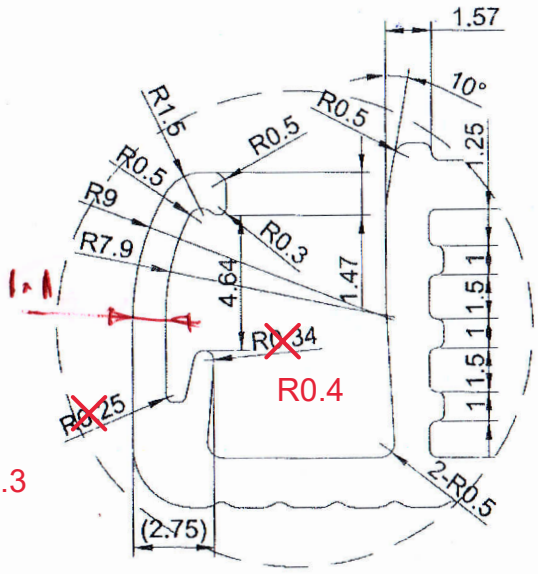

A
4:1

TH-1.5

002228

Note:
1. Unspec.wall thickness T ____ mm
2. Unspec.corners rounded to R 0.2 mm 0.4 mm
3. ———————— is exposed surface.
4. Perimeter 159.499 mm
5. Section area 180.164 mm²
6. Liner density 0.488 kg/m
7. Circumcircle Φ47 mm

Technical Requirements:
1.UNSPEC Thickness:±0.13
2.Exe Std:GB5237.1-2017 High Precision
3.Hardness:≥14HW

Machine		Processed		Change		Drawing Number	YR498	NO.	
Client		Checked		Date				Scale	2:1
Date		Released		Name		Discription	35X33 Frame	Revision	A/0
								Quantity	
Jiangyin HaiHong New Energy Technology Co., LTD						Material	6005T6	Page	
								Total	