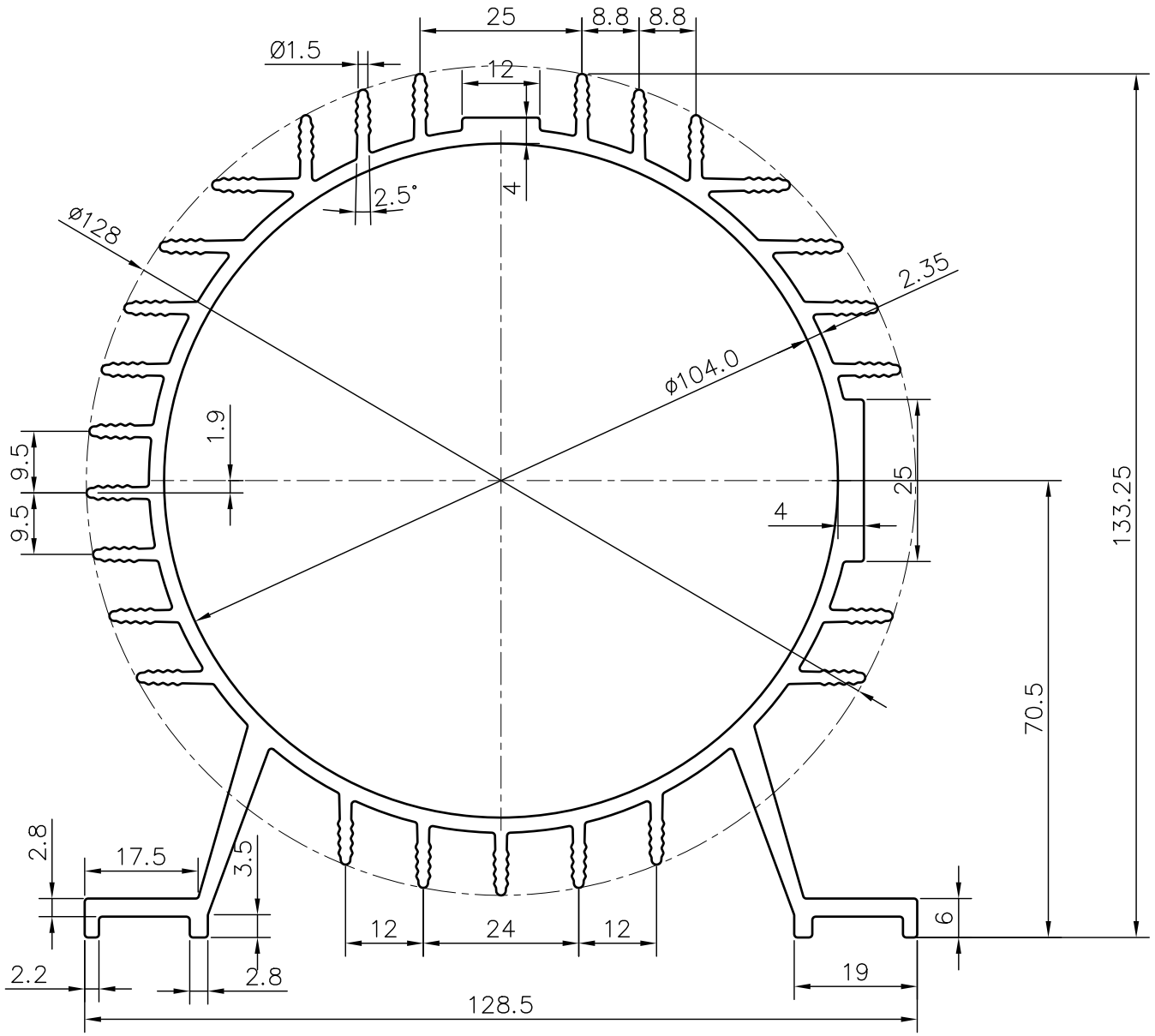

SERVO TECHNOLOGY
SAMPLE DRAWING

SYMBOL OF QUALITY
AN ISO 9001 COMPANY

JINDAL ALUMINIUM LTD.
BHIWADI–301019 (INDIA)

Area: 1690.866 Sq.mm. | Perimeter: 1084.755 mm. | Weight: 4.565 Kg./mtr.