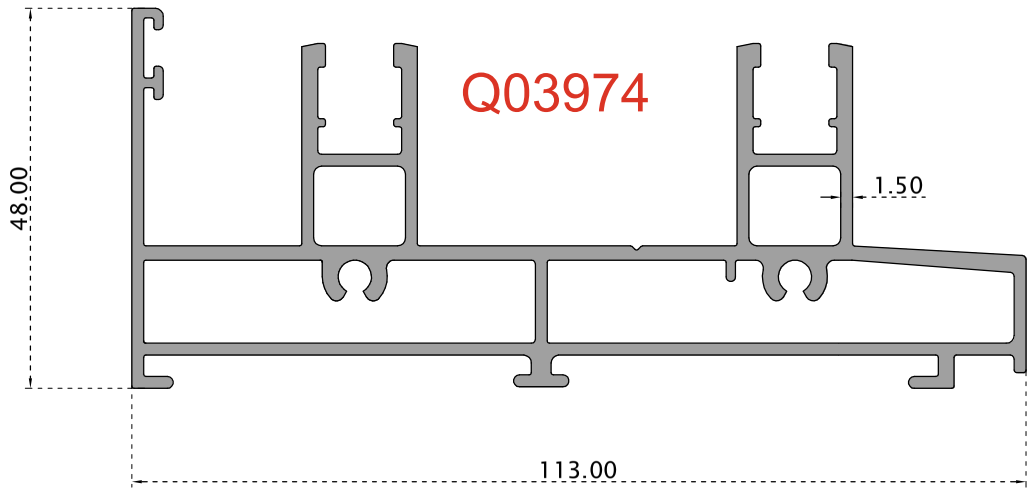

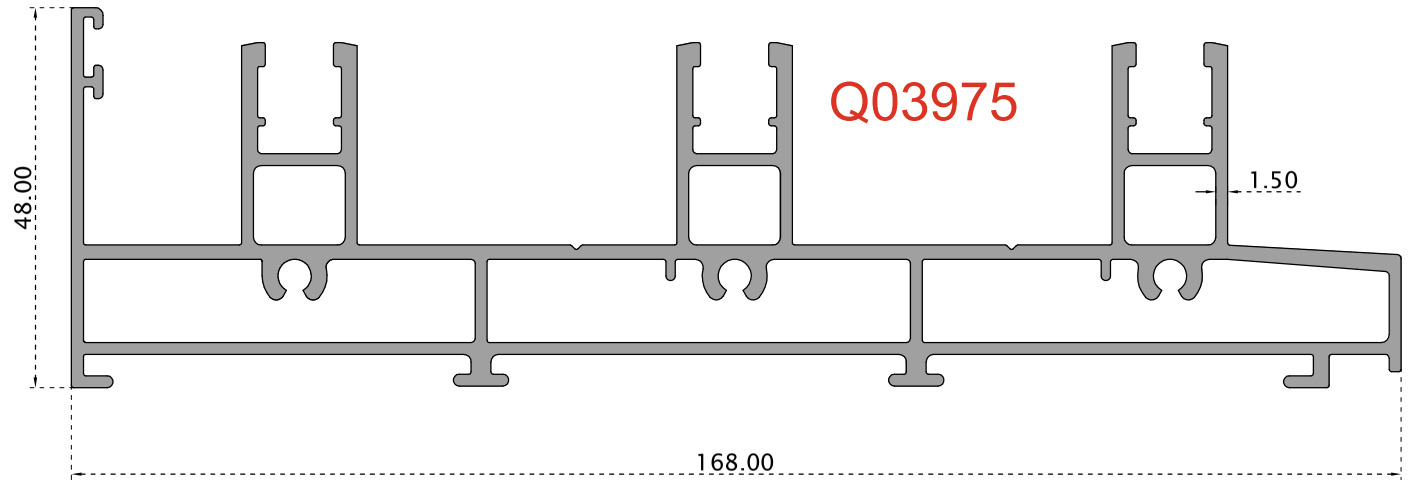

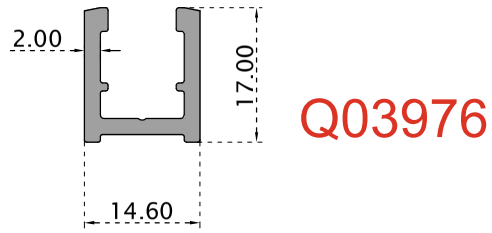

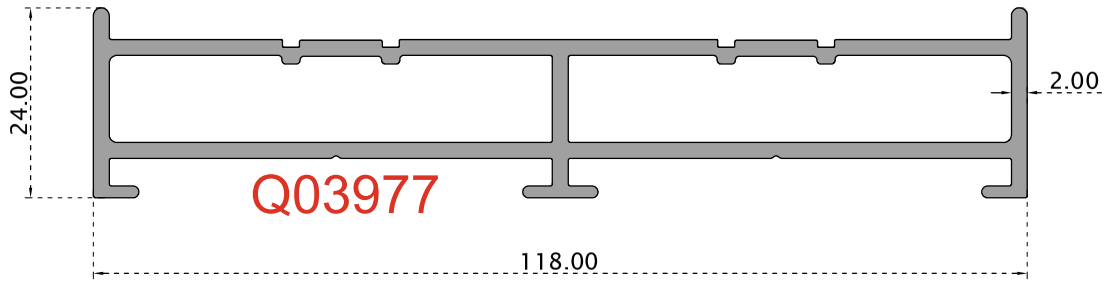

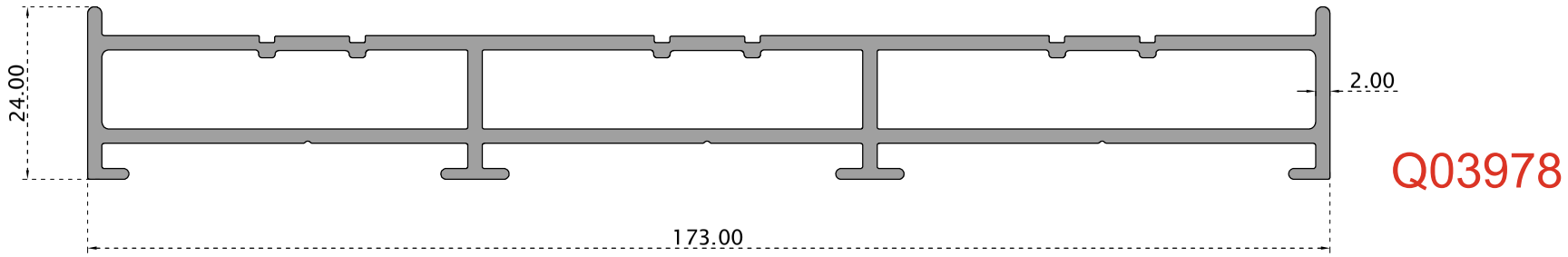

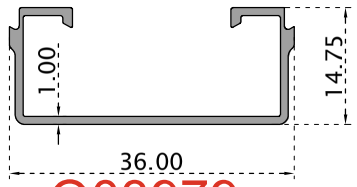

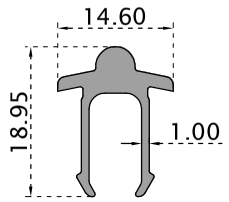

Alredy quoted Q03865

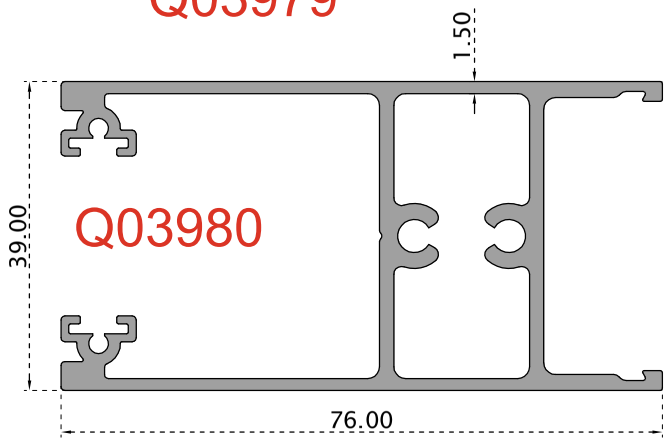

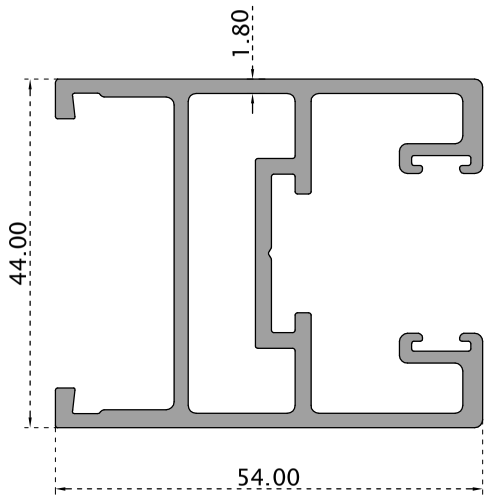

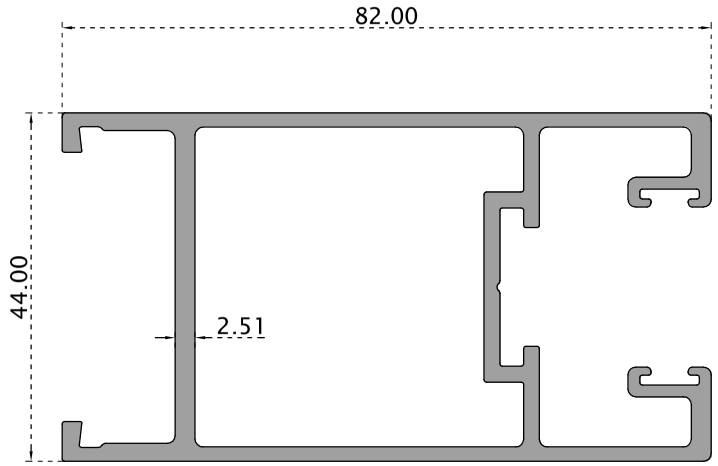

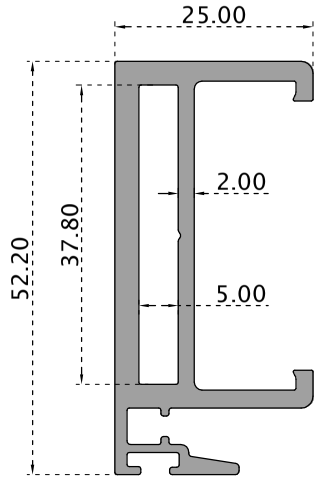

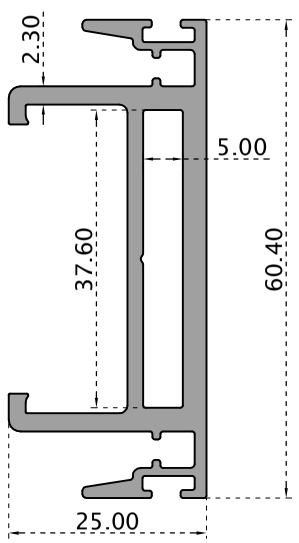

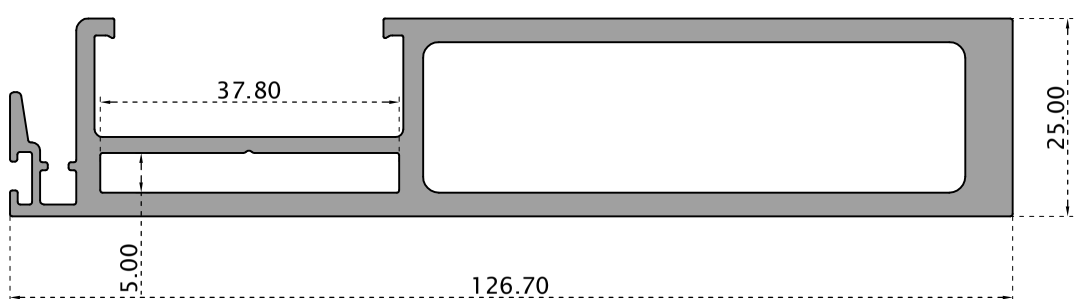

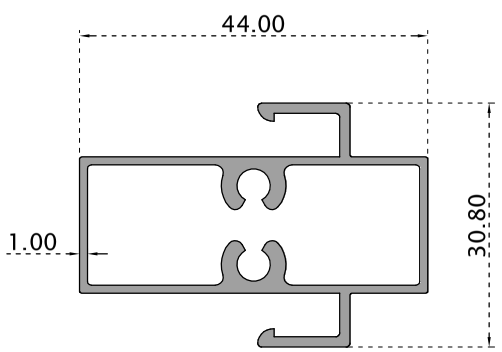

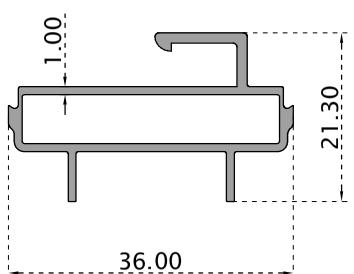

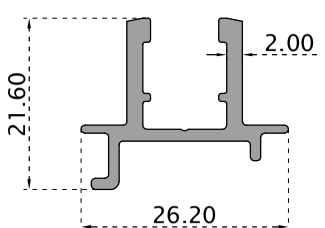

12/08/2025