Q01357 PROPOSAL DRAWING

ALLOY: -6005-T6

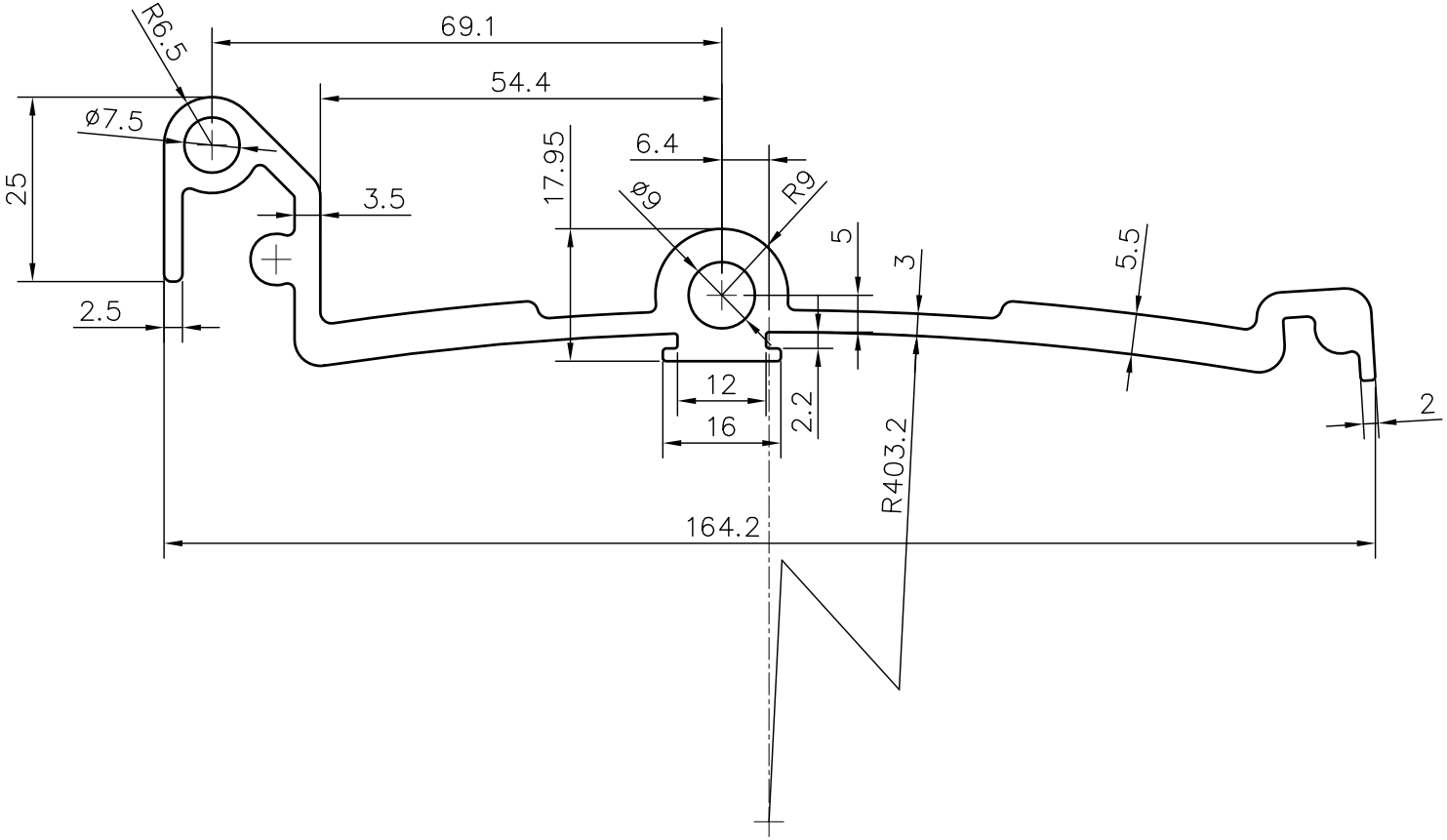

Area: 1095.387 Sq.mm. | Perimeter: 474.254 mm. | Weight: 2.958 Kg./mtr.