Q01502

Q01503 SIMILAR 46008

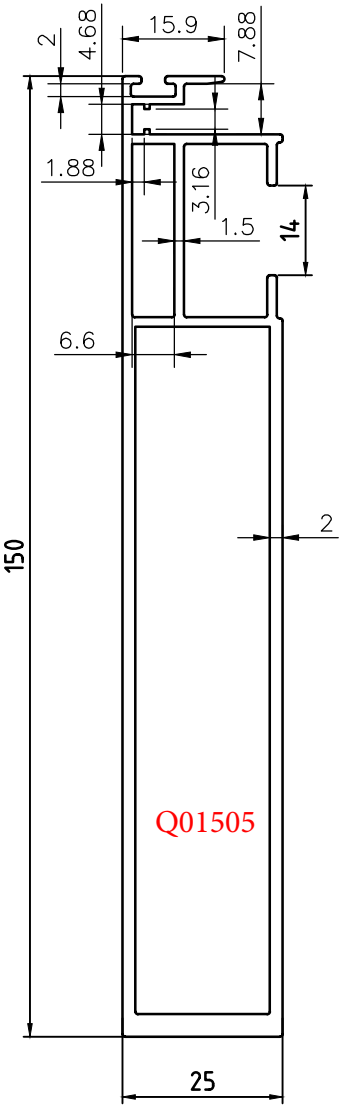

INTERLOCK
1.975 kg/m

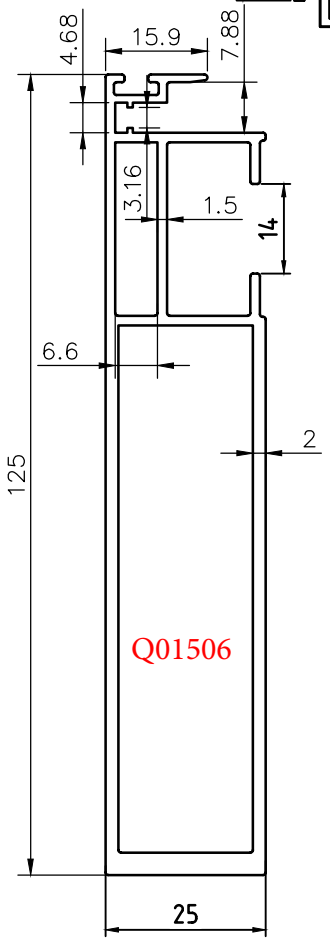

INTERLOCK
1.705 kg/m

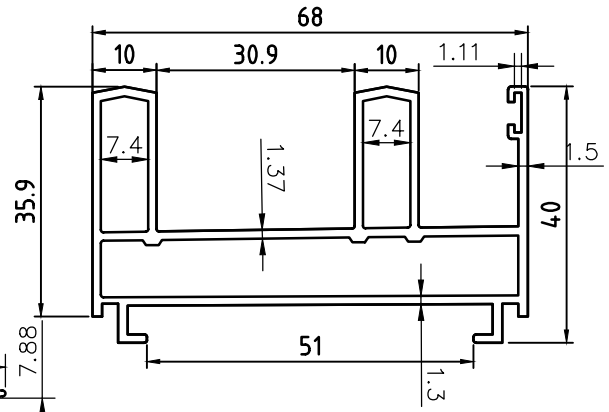

OUTER FRAME
1.119 kg/m

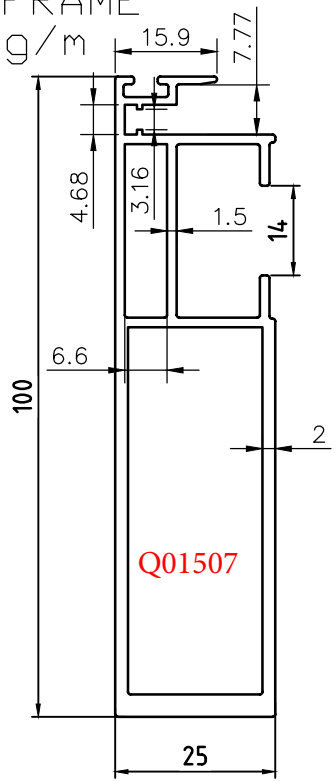

INTERLOCK
1.435 kg/m

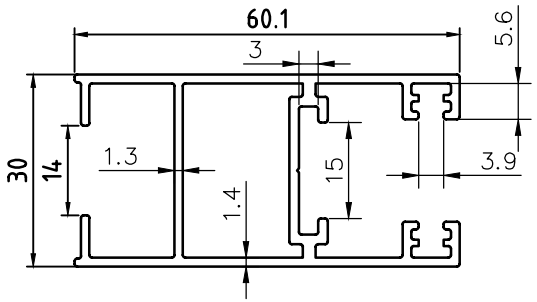

VERTICAL SHUTTER
0.877 kg/m

Q01504

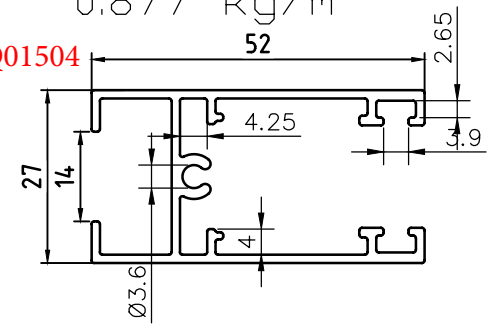

SHUTTER TOP &
0.669 kg/m BOTTOM

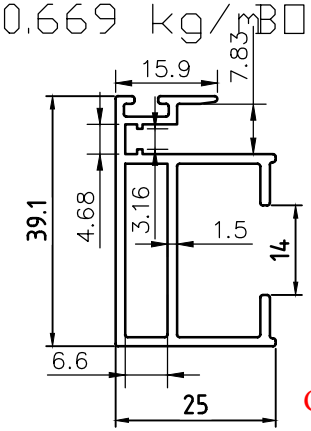

INTERLOCK
0.575 kg/m

KEY PLAN:

NOTE:-
1. ALL DIMENSIONS ARE IN MM.
2. ALL DIMENSIONS ARE TO BE READ AND NOT MEASURED.
3. ALL LEVELS ARE IN METERS.
4. GRID DIMENSIONS AND PLOT LINES ARE TO BE STRICTLY ADHERED TO.
5. ALL DIMENSION MARKED ARE IN REFERENCE TO GRIDS.
6. IN CASE OF ANY DISCREPANCY BETWEEN ANY DRAWING, ARCHITECT HAS TO BE INFORMED PRIOR TO ANY EXECUTION.

LEGEND/ SPECIAL NOTES:

REVISION LOG:

PROJECT TITLE:
GROUP HOUSING COLONY UNDER NLP POLICY AREA MEASURING (15.03125 ACRES) SECTOR -113, GURUGRAM

ARCHITECTS:
GPA DESIGN STUDIO
GOPAL P. MATHUR AND ASSOCIATES (P) LTD.
ARCHITECTS
29, East Of Kailash, New Delhi-110065
+91-26295000 / 1 / 2 / 4, 26295022
+ 91-11-26482000
mail@gpastudio.com / W : www.gpastudio.com

STRUCTURE CONSULTANT:

OWNER:

FACADE CONTRACTOR:
ALAMDAR FABRICATOR PVT. LTD.
Green Plaza -72 , Block No.-D1, Second Floor , Near Punjabi Bagh Club , Delhi-110026
Mail: info@alamdarfabrik.com

REVISION
R0 R1 R2 R3 R4 R5 R6 R7

DRAWING TITLE:-
TYPICAL WINDOWS ELEVATION

JOB NO. V-2024-001
DRAWING NO. 02

DATE	SCALE	DRN BY	CHK BY
10.05.2024	1:100 / A0	SID	ARL SIDDH