C.L.	E.C.O.	REVISION	CHKD.	DATE
A	CA-20-13273	NEW DRAWING RELEASE	VP	19-8-20

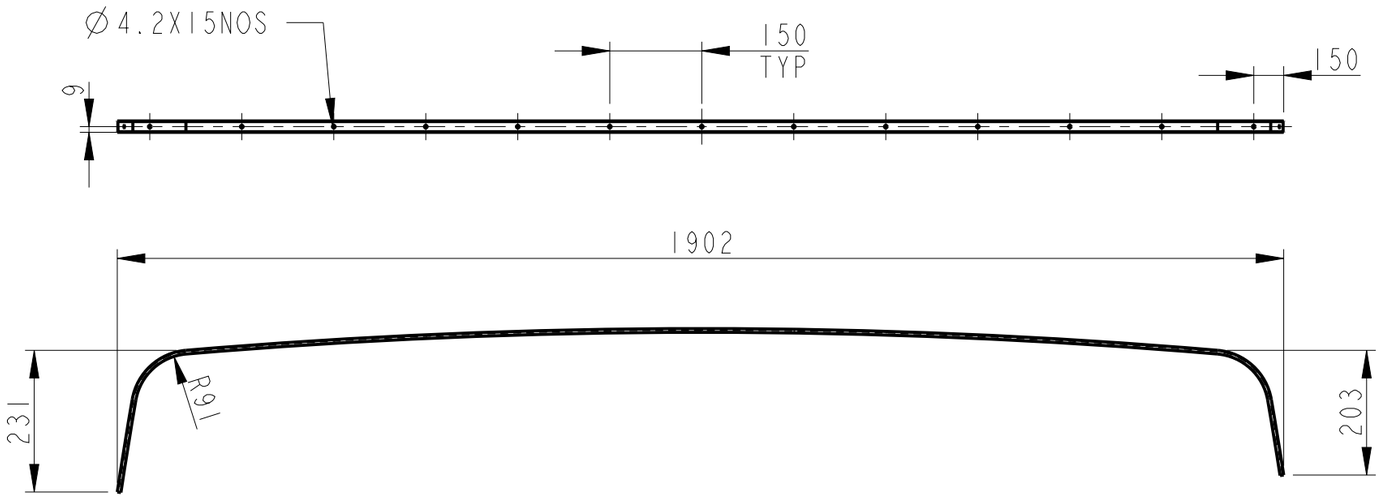

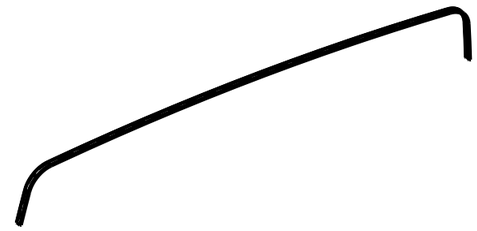

USER VIEW
NTS

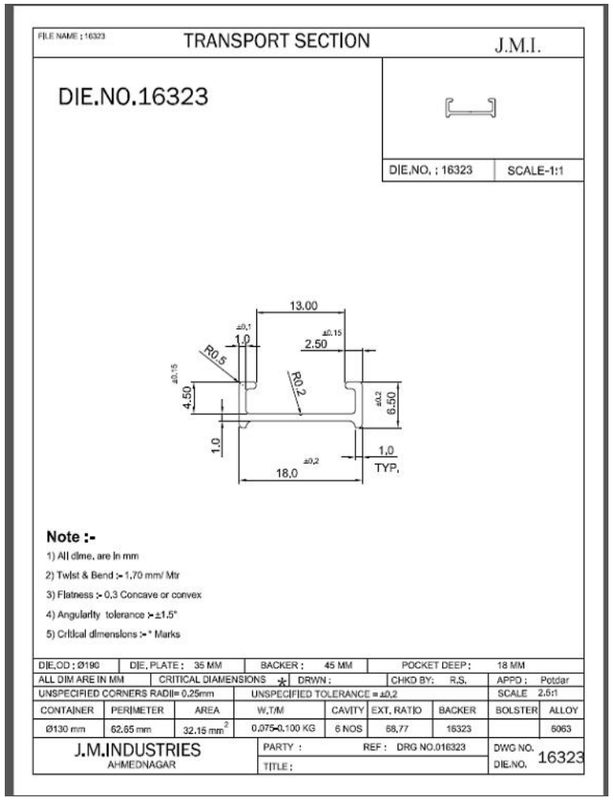

NOTE:-
1. REMOVE SHARP EDGES AND BURRS.
2. DEVELOPMENT LENGTH-2217mm.
3. PART TO BE GRAY ANODIZED WITH THICKNESS SHOULD BE AC25.
4. USE DIE NO. 16323
5. FOLLOW STANDARD WCQ-AL-001

ALL DIMENSIONS ARE IN MM ⊕⊕ – CRITICAL ● – MAJOR ◐ – MINOR	HEAT TREATMENT EFFECTIVE CASE DEPTH	MATERIAL AL. IS:737:1986 WT-Kg. 0.190	EICHER VE COMMERCIAL VEHICLES LTD.
TOLERANCES UNLESS SPECIFIED IS 2102 MEDIUM FOR MACHINING AND COARSE FOR FABRICATION	HARDNESS: SURF / CORE	SCALE 1:10 DRN SJ	DESCRIPTION AL SEC ROOF BEADING
	FINISH: POWDER COATING AS PER EPI-2 ES-x71221 SURFACE ROUGHNESS	CHD VP APPD SSJ	PART No./DRG. No. IU502861
			SHT. No. 1 of 1 · CL. A · SIZE A3

P Release