Q02652

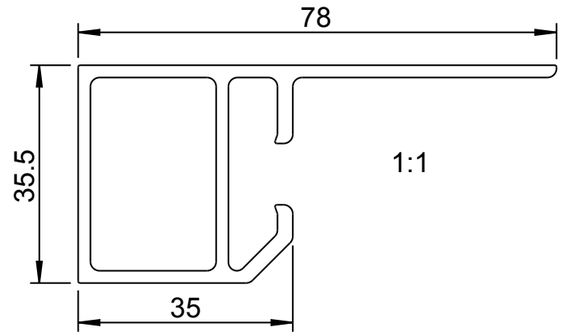

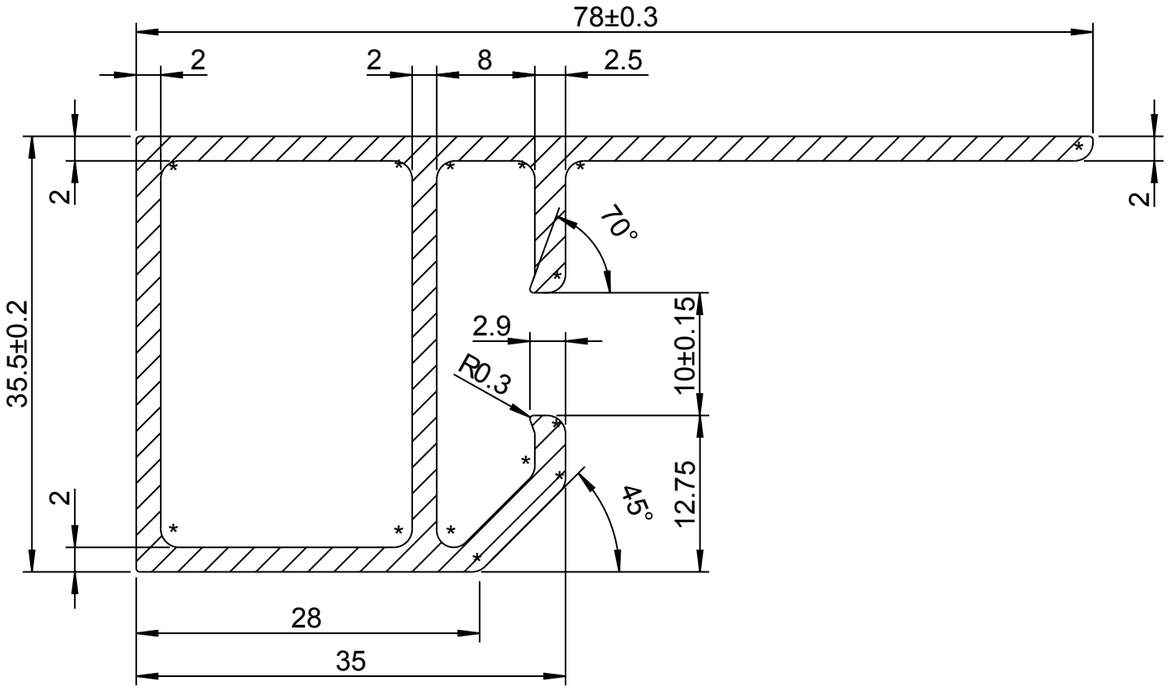

NOTE:
-Tolerances acc. EN 12020-2
-* indicates radius R=1.5
-Unindicates radius R=0.3
-Distortion is no greater than 1mm/m
-Straightness is no greater than 1mm/m
-It need not anodized

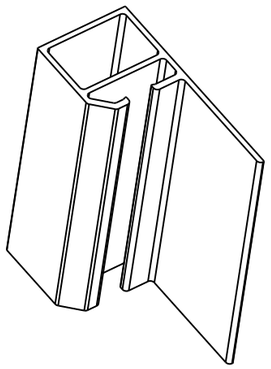

1:2

FILENAME OF MODEL: D-2523-012	Projection	FILENAME OF DRAWING: D-2523-012	
Application:	GENERAL TOL. ISO 2768 mK ISO 13920-BF ISO 1101 / FORMAT A3	SCALE: 2:1	WEIGHT:0.112kg
		MATERIAL: EN_AW-6063-T5	ASSEMBLY DRAWING:

	DATE	NAME
DESIGN	24.07.2009	La
CHECK	-	-
APPROVE	-	-

(DESCRIPTION)
Rear profile section

ULTIMATE Transportation Equipment GmbH

(DRAWING NO) D-2523-012

PAGE 1 /1

ISSUE	MODIFICATION	DATE	NAME	BASED ON:	(REPL. FOR:)	(REPL. BY:)
-	-	-	-			