Transmittal reproduction, dissemination and/or editing of this document as well as utilization of its contents and communication thereof to others without express authorization is prohibited. Offenders will be held liable for payment of damages. All rights created by patent grant or registration of a utility model or design patent are reserved.

Weitergabe sowie Vervielfältigung, Verbreitung und/oder Bearbeitung dieses Dokumentes, Verwertung und Mitteilung seines Inhaltes sind verboten, soweit nicht ausdrücklich gestattet. Zuwiderhandlungen verpflichten zu Schadensersatz. Alle Rechte für den Fall der Patenterteilung, Gebrauchsmuster- und Geschmacksmustereintragung vorbehalten.

Q02654

6.3

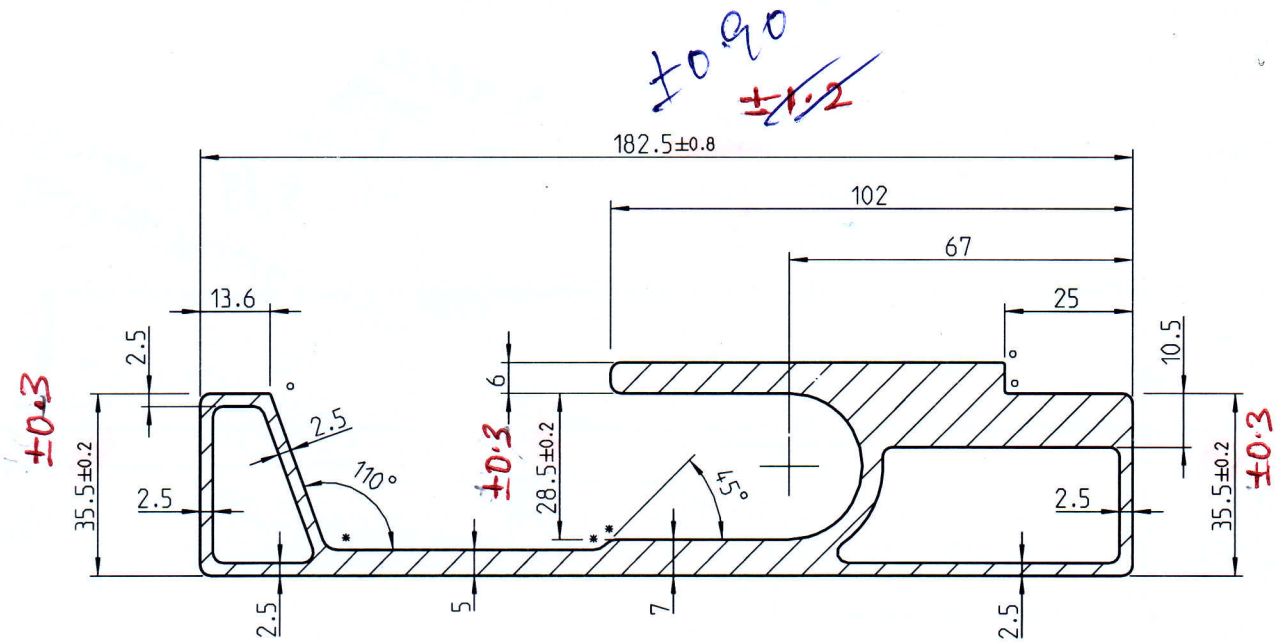

Φ380 X225 thick

BPS-330x215

WT- 6.124 kg/m

300		350	1.2	
250		300	1.0	
200		250	0.85	
150		200	0.70	
100		150	0.50	
60		100	0.40	
30		60	0.30	
-		30	0.20	
over		up to		
W			f tol. ±	
Convexity - Concavity EN 12020-2				
300	350	1.80	1.80	2.10
240	300	1.50	1.50	1.80
180	240	1.20	1.20	1.50
150	180	1.00	1.00	1.30
120	150	0.80	0.60	1.00
90	120	0.60	0.60	0.80
60	90	0.45	0.45	0.65
45	60	0.40	0.40	0.55
30	45	0.30	0.30	0.45
15	30	0.25	0.25	-
10	15	0.20	0.20	-
	10	0.15	0.15	-
over	up to		E<60	60≤E<120
H		H tol. ±	H tol. ± (open end)	
Dimensions EN 12020-2				
30	40	0.45	0.60	-	-
20	30	0.40	0.50	-	-
15	20	0.35	0.45	1.20	1.50
10	15	0.30	0.40	0.80	1.00
6	10	0.25	0.35	0.60	0.80
3	6	0.20	0.30	0.40	0.60
1.5	3	0.15	0.25	0.25	0.40
-	1.5	0.15	0.20	0.20	0.30
over	up to	D<100	100≤D<300	D<100	100≤D<300
A, B, C		A tol. ±		B, C tol. ±	
Wall thickness EN 12020-2					

NOTE:

1. Dimension Tolerances:
   acc. to EN 12020-2
   Straightness not greater than 1mm/m
   Distortion not greater than 1mm/m
2. Chemical composition:
   acc. to EN 755-2 or GB/T 6892-2006
3. Mechanical Properties:
   * $Rp_{0.2}$ >= 110MPa
   R_m >= 160MPa
   A_0 >= 5%
4. All radius = R2 u.o.n.
5. * indicates R3
6. ° indicates R0.5

APPLICATION: A0955 Tuvasas EMU	GENERAL TOL EN 12020-2	FORMAT A3	3D MODEL D-2544-062
			MATERIAL EN AW-AlMg0,7Si / EN-AW-6063-T5 / EN 755-2
	DATE	NAME	
	DESIGN 14.11.2018	DKo	
	CHECK 23.01.2019	BP	
	APPROVE 23.01.2019	BP	
	DE/EN	mm	
INDEX / REVISION NUMBER / DATE / NAME	BASED ON:		

WEIGHT 6.124 kg/m		
1 : 1		
DESCRIPTION: Guide rail profile cross section		
DRAWING NO D-2544-062	REV 1.0	PAGE 1 / 1
(REPL. FOR:)	(REPL. BY:)	

ULTIMATE Transportation Equipment GmbH