SPECIAL CHARACTERISTICS SYMBOLS

◇ – FIT / FUNCTION ▭ – SURFACE FLATNESS TOLERANCE (▽) – SAFETY / COMPLIANCE

Wt./ASSLY.	F-1 FINISH ROUGH	(D1) ROUGH CLEANING
Kg	F-10 FINISH OUT	(1B) CHAMFERED
		(D1B) BURRS REMOVED

GRADE NO.	N1	N2	N3	N4	N5	N6	N7	N8	N9	N10	N11	N12
RO µm	0.25	0.50	0.1	0.2	0.4	0.8	1.6	3.2	6.3	12.5	25	50
SYMBOL	▽▽▽▽			▽▽▽			▽▽			▽		—

AUTHORIZED FOR	DATE	SIGN.
☐ PROTOTYPE		
☐ DRAFT		
☐ PRODUCTION		
☐ PURCHASING		
☐ QUOTATION		

THIS DRAWING IS THE PROPERTY OF NBR COOLING SYSTEMS PVT LTD. THIS SHOULD NOT BE COPY OR COMMUNICATED TO ANY PERSON WITHOUT WRITTEN APPROVAL OF THE PROPRIETOR

IF ANY DOUBT.PLEASE ASK

UNLESS OTHERWISE SPECIFIED ALL DIMENSIONS ARE IN [mm]

SCALE : NTS

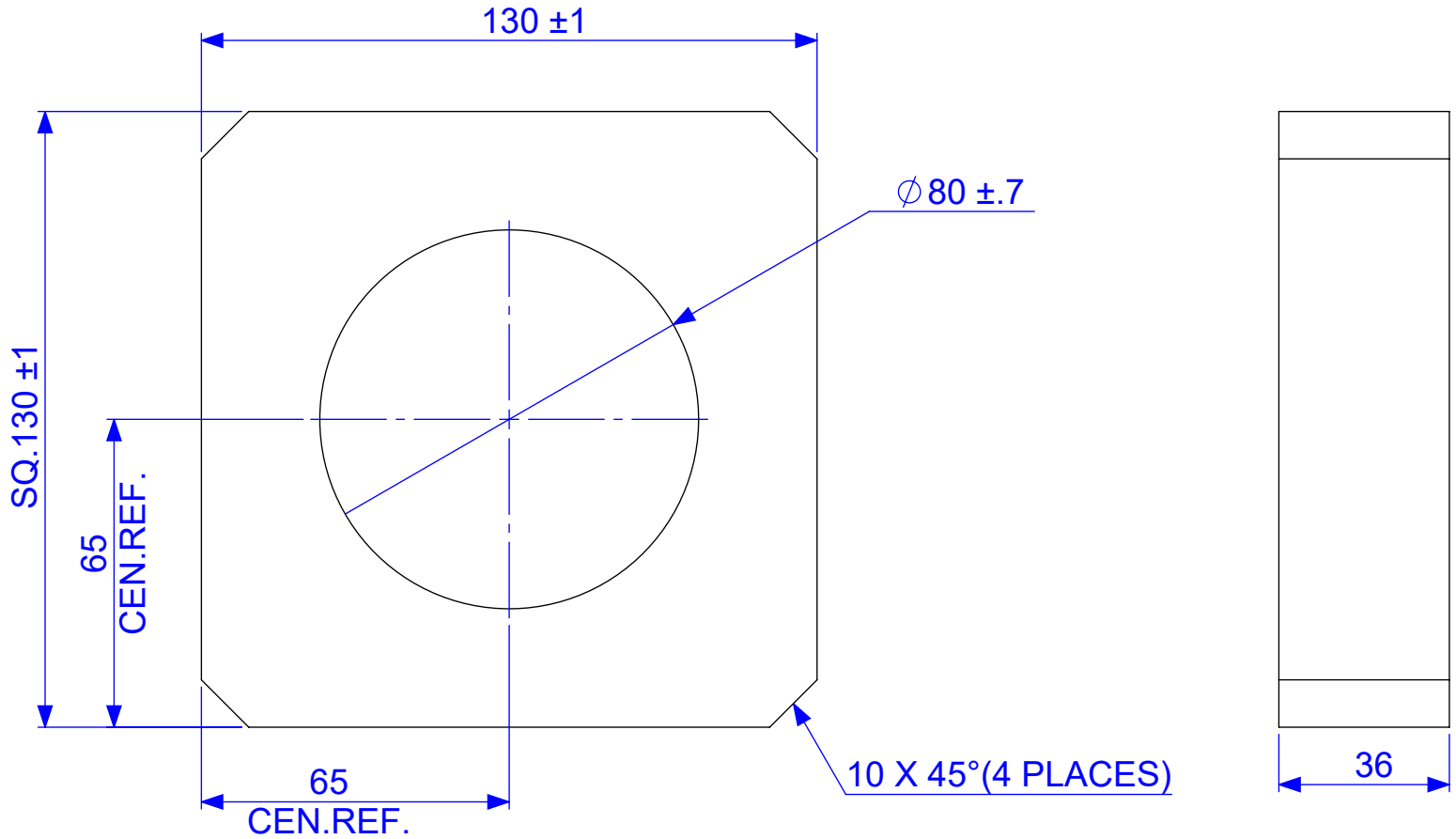

Q02722

WEIGHT :- 1.13 Kg Approx.

1. STRAIGHTNESS= 1.7mm/M
2. TWIST = 1.7mm/M
3. ANGULARITY= ±2°
4. FLATNESS= 0.007 X Width

GENERAL TOLERANCE CHART

+ -	0 TO 3	3 TO 6	6 TO 30	30 TO 120	120 TO 315	315 TO 1000	1000 TO 2000	RIGHT ANGLE	OTHER
(A)	0.05	0.1	0.15	0.2	0.3	0.4	0.7	1.0	1.5
B	0.2	0.3	0.4	0.5	0.7	1.0	1.6		
C	0.4	0.5	0.6	0.8	1.2	1.6	3.0	2.0	3.0
D	0.5	0.8	1.0	1.2	1.8	2.8	4.0		
E	1.0	2.0	2.5	3.5	5.0	7.0	10.0		
F	10.0				15.0	20.0	30.0		

MATERIAL:-6061 T6

SCALE	UNIT	QTY/UNIT	DATE:
NTS	M.M.	4	14-11-2024

ASSY.NAME:

PART NAME: Extrusion for Flange

DRG.NO: NBRALEXT-1905-0001-0003-02

REF.NO:

PG.NO. 01 REV.NO. 000

Rev. No.	Rev by	DATE	REVISION CONTENT

DRAWN BY: Eng.Abhishek

CHECKED BY: Eng.Mandar

APPROVED BY: Mr.Bhanu prakash

NBR REDEFINING ENGINE COOLING

NBR COOLING SYSTEMS PVT.LTD.