Rev.no.	ECN.no.	Revision.no.	Date & Sign.

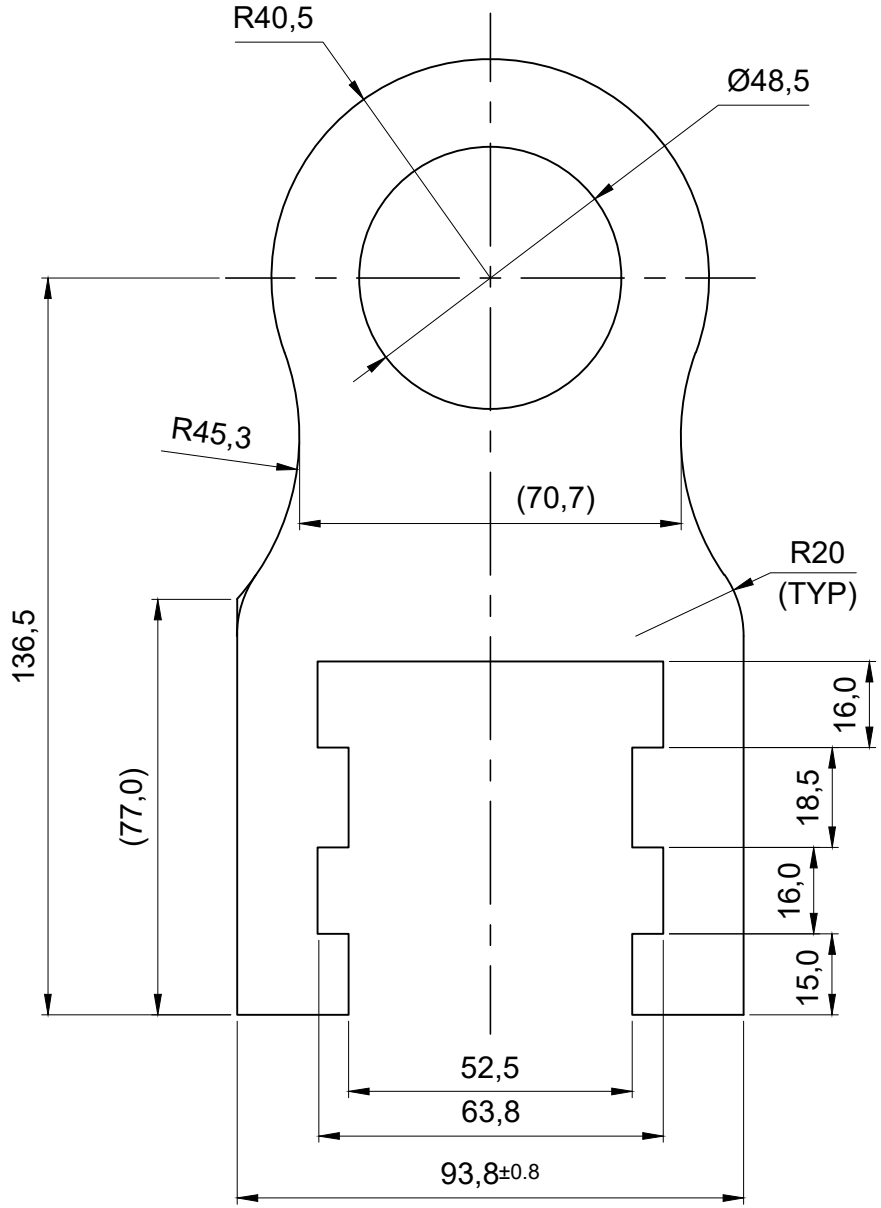

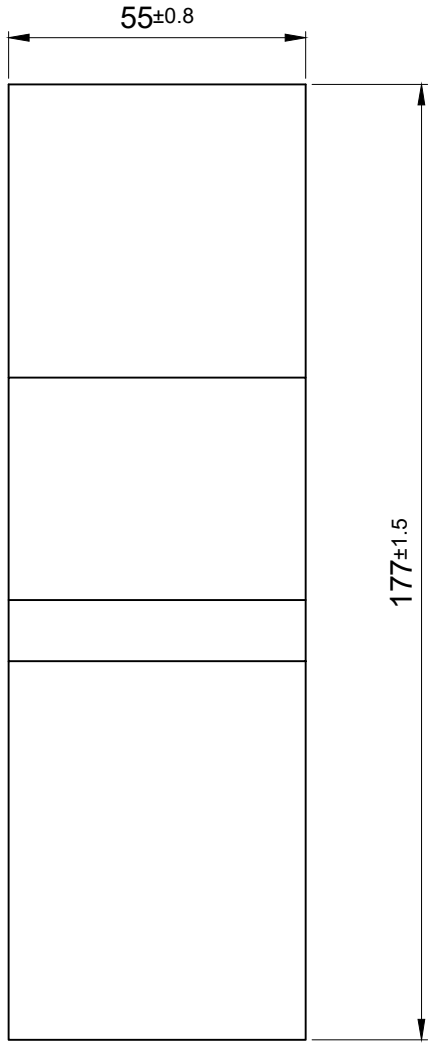

Q02783

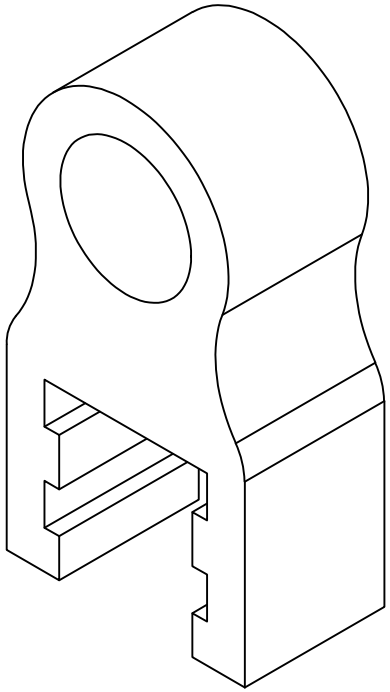

NOTE:-
MATERIAL - 6061-T6
FINISH - SELF

NOTE:-
ALL DIMENSIONS ARE IN MM OTHERWISE SPECIFIED.
IF YOU HAVE ANY DRAWING AGIANST THIS CODE KINDLY OBSOLETE.

DRAWN BY	CHK'D BY	APPV'D BY PROC. ENGG	APPV'D BY PROD. ENGG	FINISH	DATE	MATERIAL	WEIGHT	ANGLE
JAGDEEP S.				SEE NOTE	05.12.2024	SEE NOTE	1.30Kg	

SUSHIL INDUSTRIES

TITLE :-	BALL HOLSER (E1)		REV. :- 00
DWG.NO. :-	SI-1166-04	SCALE: NTS	SHEET 1 OF 1