Q02795

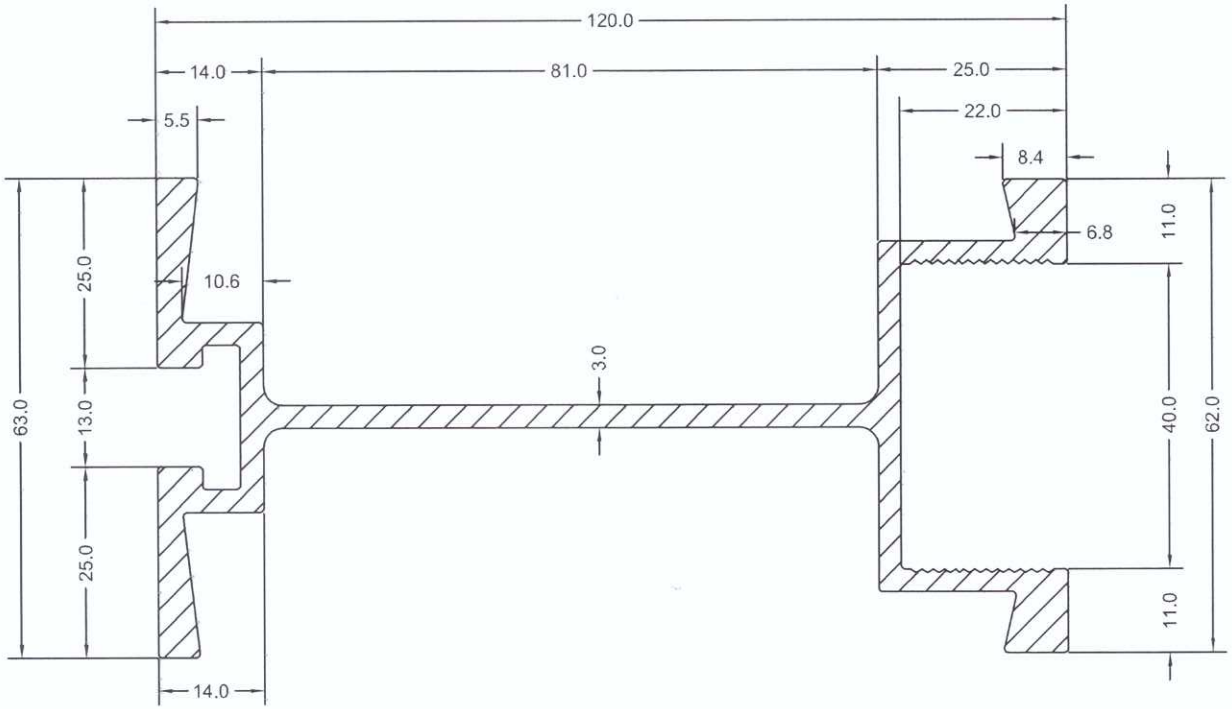

WT.= 2.635 KG/M

NOTE:- ALL DIMENSIONS ARE IN mm.

UNSPECIFIED RADIUS:-0.50

UNSPECIFIED TOLERANCES WILL BE IN ACCORDANCE WITH DIN ISO 2768-1 class C – Coarse

DIMENSION LONGITUDINAL	0.5 - 3 ± 0.2	3 - 6 ± 0.3	6 - 30 ± 0.5	30 -120 ± 0.8	120 - 400 ± 1.2	400-1000 ± 2.0
CHAMFER & RADIUS	0.5 - 3 ± 0.4	3 - 6 ± 1.0	6 - 30 ± 2.0	30 -120 ± 2.8		
DEGREES & MINUTES	up to 10 ± 1°30'	10 - 50 ± 1°	50 - 120 ± 0°30'	120-400 ± 0°15'	over 400 ± 0°10'	

PADMAWATI EXTRUSION PVT. LTD.

AREA :- 976.088 Sq mm^	ALLOY/TEMPER:-	DRAWN BY: OM
PERIMETER :- 567.8838 mm	FLATNESS:-±0.92mm^	DATE: 09/10/2023
WEIGHT :- 2.635 Kg/mtr	TOLERANCES:	REVISION:-
PARTY NAME :-	ANGULARITY:-±2°	CHECKED BY:-
PR DRG NO:-	STRAIGHTNESS:-1.70meter	APPROVED BY:-
SECTION NO:-P74102	TWIST:-1.70mm/meter	SCALE: 1:1