PROPOSED DRAWING

Q02909

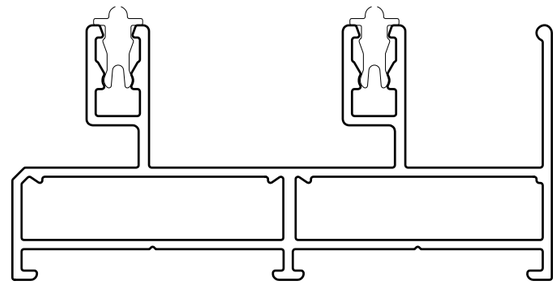

SCALE 1:1

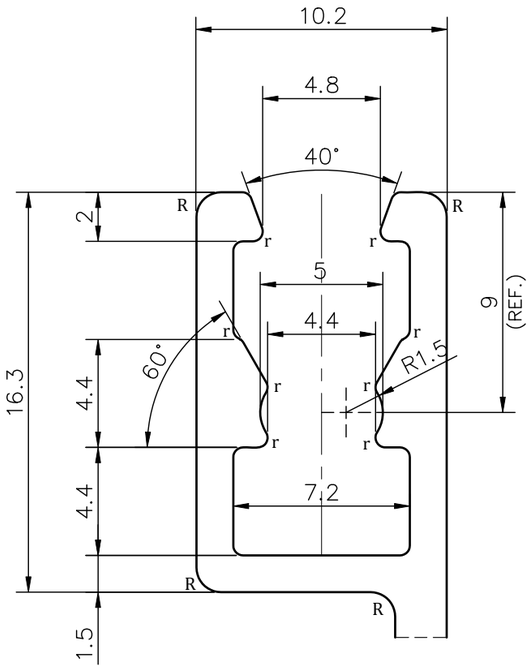

DETAIL A
SCALE 4:1

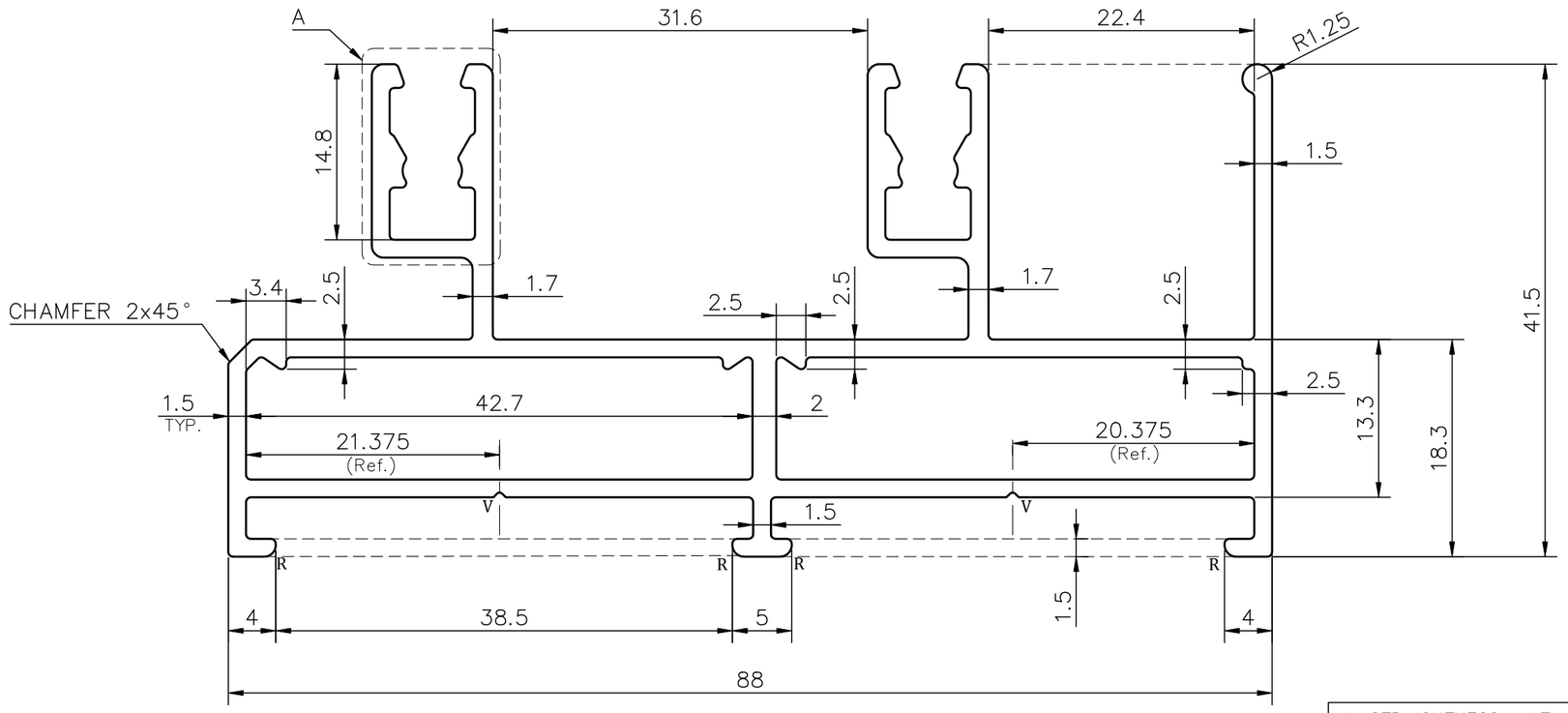

1. STRAIGHTNESS= 1.7mm/M
2. TWIST= 1.7mm/M
3. ANGULARITY= ±2°
4. FLATNESS= 0.007xWIDTH

UNCONTROLLED COPY

NOTE:-
r= 0.40 RADIUS (8 PLACES)
R= 1.0 RADIUS (8 PLACES)
V= 0.4x90° V GROOVE (2 PLACES)

1) THE WELDING LINE IN THE EXPOSED SURFACE OF PROFILE IS UNAVOIDABLE. 2) PLEASE SPECIFY IMPORTANT SIZES. 3) PLEASE SPECIFY IF THIS PROFILE MATCHES WITH OTHER PROFILES. 4) PLEASE SPECIFY EXPOSED SURFACE. OTHER WISE CONSIDERED AS NO EXPOSED SURFACE. 5) FINISH :- ☐ MILL FINISH / ☐ANODIZING / ☐POWDER COATING

JINDAL
SYMBOL OF QUALITY
AN ISO 9001 COMPANY

JINDAL ALUMINIUM LTD.
BHIWADI-301019 (INDIA)

	NAME	DATE
DRAWN	*ASHUTOSH*	23-05-2023
CHECKED		
APPROVED		

1. ALL DIMENSIONS ARE IN mm.
2. ROUND OFF ALL SHARP CORNERS WITH 0.40 mm.
3. TOLERANCES WILL BE AS PER BS:EN-755-9 , UNLESS OTHERWISE SPECIFIED

SCALE	2:1
AREA mm^2	558.92
PERIMETER mm.	485.20
WEIGHT kg/m	1.509

PARTY'S NAME	M/s. FENSTER HOLZ IND. PVT. LTD.- DELHI
PARTY'S DRAWING No.	AS PER SAMPLE
ALLOY & TEMPER	6063-T6
DESCRIPTION	WINDOW SECTION

DRAWING No.	SECTION No.
–	