| ITEM NUMBER | DESCRIPTION |
|---|---|
| 7110-1 | AS MANUFACTURED--NO COATING |
| 7110-2 | ACID ETCH AND ADHESIVE |

| REVISION BLOCK | | | | |
|---|---|---|---|---|
| DATE | REV# | DESCRIPTION | DES. | ENG. |
| 10JAN25 | 0 | INITIAL PRINT | ABC | EZ |
| | | | | |
| | | | | |

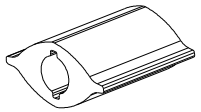

ISO VIEW
1:1 SCALE

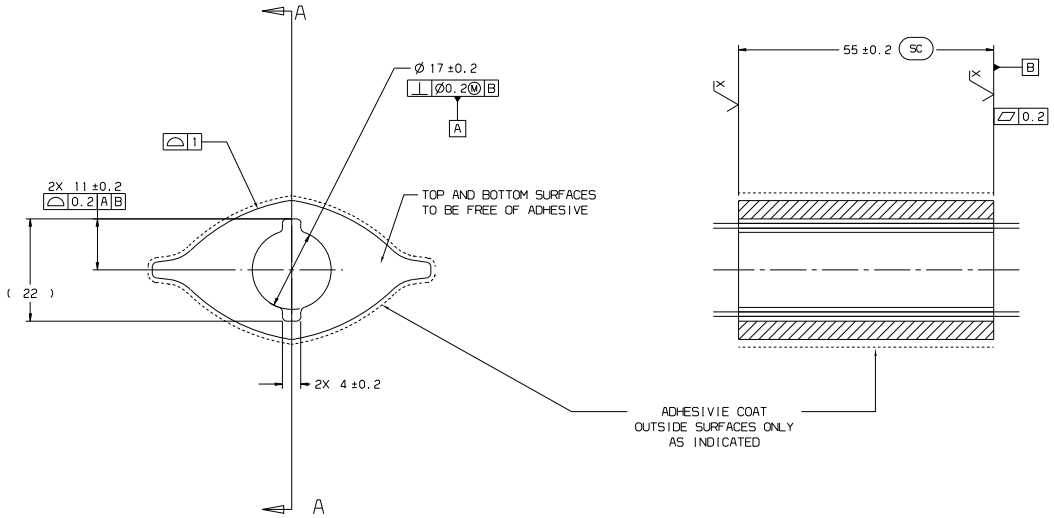


Q02931




SECTION A-A

NOTES:

MATERIAL: 6081-T6 OR 6082-T6 OR EQUIVALENT (43.5cc)

MUST BE FREE OF BURRS , SHARP EDGES, AND FLASHING WHICH HINDERS DETRIMENTAL TO SAFE HANDLING OR PART FUNCTIONALITY

PART MUST BE FREE OF CHLORINATED PARAFFIN, ONLY WATER BASED PROCESSING OILS ARE TO BE USED IN THE MANUFACTURING OF THIS PART

SC -IS A SPECIAL CHARACTERISTIC

3D MODEL IS MASTER

GENERAL DELIVERY CONDITION AND CLEANLINESS:

- SURFACE TO BE FREE OF GRAPHITE, MOLYBDENDISULFID, SULFUR, SILICONE, GREASE, DIRT AND ANY OTHER MATERIALS NOT SPECIFIED ON THE DRAWING OR PART REQUIREMENTS.
- OIL IS PERMITTED FOR PARTS REQUIRING CORROSION PROTECTION AND MUST BE COMPLETELY REMOVABLE WITH PERCHLORETHYLEN BETWEEN 140F AND 175F (60C AND 80C) OR EQUIVALENT CAUSTIC CLEANER AT 165F (75C).
- BURRS OR SHARP EDGES RELATED TO SAFE HANDLING NOT PERMITTED.
- FREE OF CADMIUM.

| | | |
|---|---|---|
| +0.2 / -0.2 | GEOMETRICAL TOLERANCS FOR FEATURE WITHOUT INDIVIDUAL TOLERANCES INDICATIONS ISO 2768-mK GEOMETRICAL TOLERANCING ISO 8015 | STAMPED PARTS DIN 6930-m DIMENSIONS FOR WELDED CONSTRUCTIONS DIN EN ISO 13920 B |
| CAST IRON WITH SPHEROIDAL GRAPHITE/GREY CAST IRON ISO 8062 DCTG 10 | LIGHT METAL ALLOYS ISO 8062 DCTG 6 GCTG 4 | ALUMINIUM FORGINGS DIN EN 586-3 DROP FORGINGS DIN EN 10243 F |
| EDGES ISO 13715 SURFACES ISO 1302 | RUBBER ISO 3302-M3 PLASTIC MOLDED PARTS NF T 58-000 STANDARD DIN 16742 TG 7 | ALUMINUM/ ALUMINUM ALLOYS/EXTRUED ROD BAR/TUBE AND PROFILES NF EN 755-9 DIN EN 755-9 |

PRINT CONTROL STAMP:
MASTER DRAWING
(UNCONTROLLED IF PRINTED)
(MASTER - RED SHOULD NOT APPEAR ON PRINT UNTIL IT IS LOADED INTO FLEXIBLE E-PRINT SYSTEM)

UNLESS OTHERWISE SPECIFIED ALL DIMESIONS ARE IN MILLIMETERS

TOLERANCES UNLESS OTHERWISE SPECIFIED: X. ± 1.0MM; .X ± 0.5MM; .XX ± 0.25MM; EDGE RADII 2.0MM MAX.; ANGLES ±2°

SCALE: 2:1 (DO NOT SCALE DRAWING)
THIRD ANGLE PROJECTION
CAD: CATIA

| | |
|---|---|
| CUSTOMER: | CUSTOMER PART NO.: N/A |
| CALC. WEIGHT: 0.118kg | DESCRIPTION: INNER |
| DRAWN BY: A.CHILDRESS | APPROVED BY: E.ZENELI |
| ITEM #: SEE CHART | DWG. FILE #: 7110 (INNER).CATPart; SHEET: 1 of 1 |