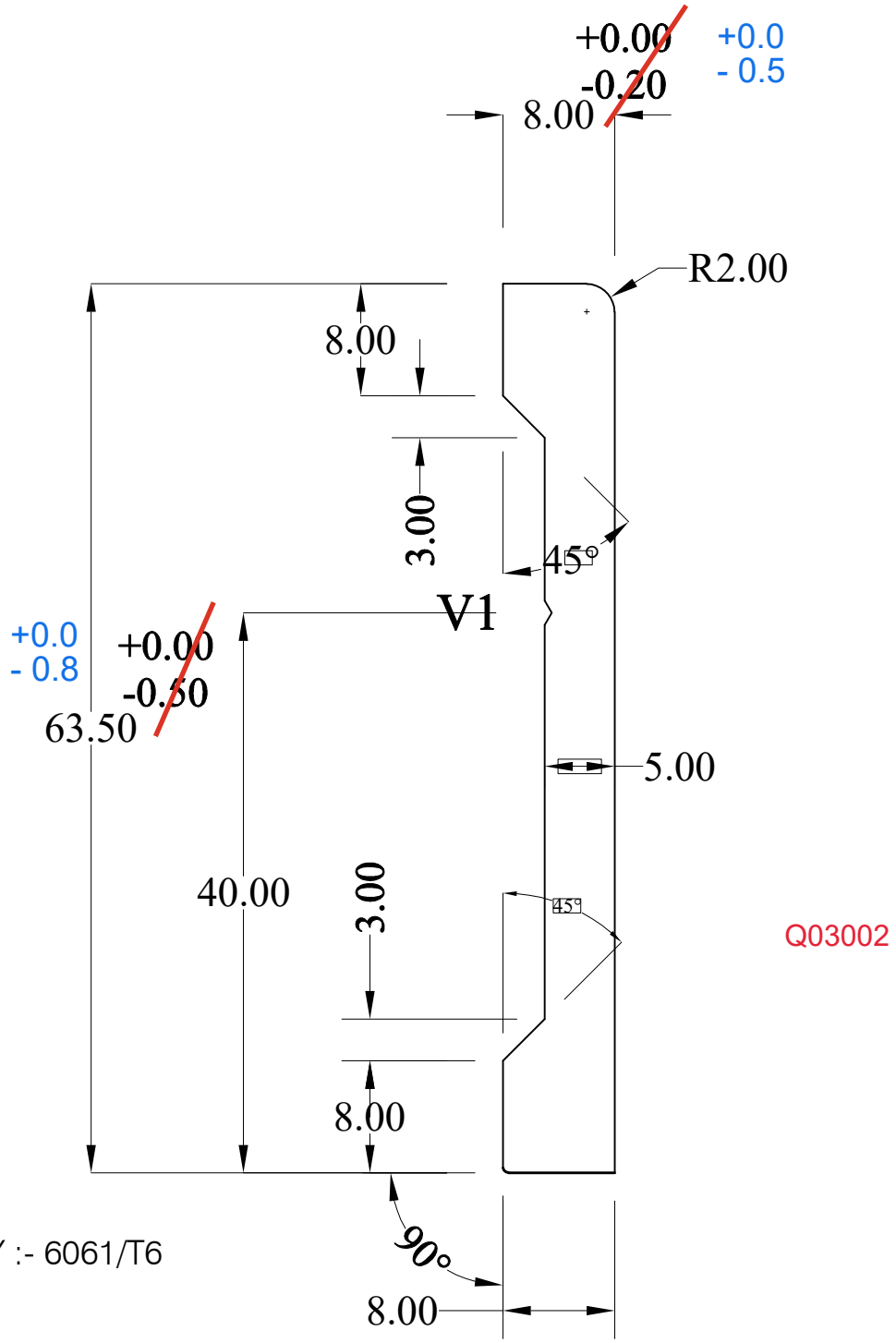

Q03002

ALLOY :- 6061/T6

NOTE :-

(1) ALL DIMENSIONS ARE IN MM.
(2) UNSPECIFIED RADIUS R0.30MM
(3) UNSPECIFIED TOLERANCE AS PER IS: 3965 – 1981
(4) CUSTOMER APPROVAL OF DIMENSION AND TOLERANCES CONSTITUTE ACCEPTANCE OF MATERIAL AS PER THIS PRINT.

MAIN FRAME SECTION