3461
16458

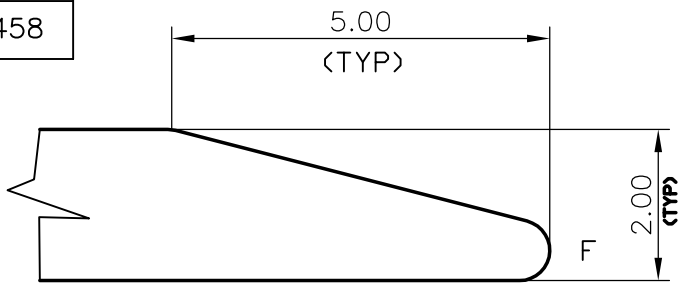

DETAILS A
10:1

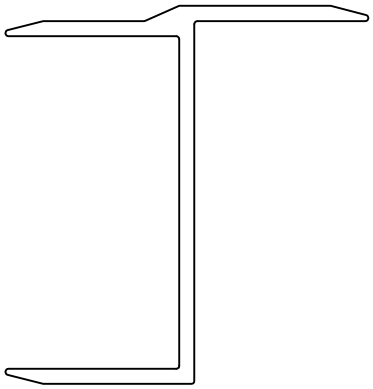

1:1

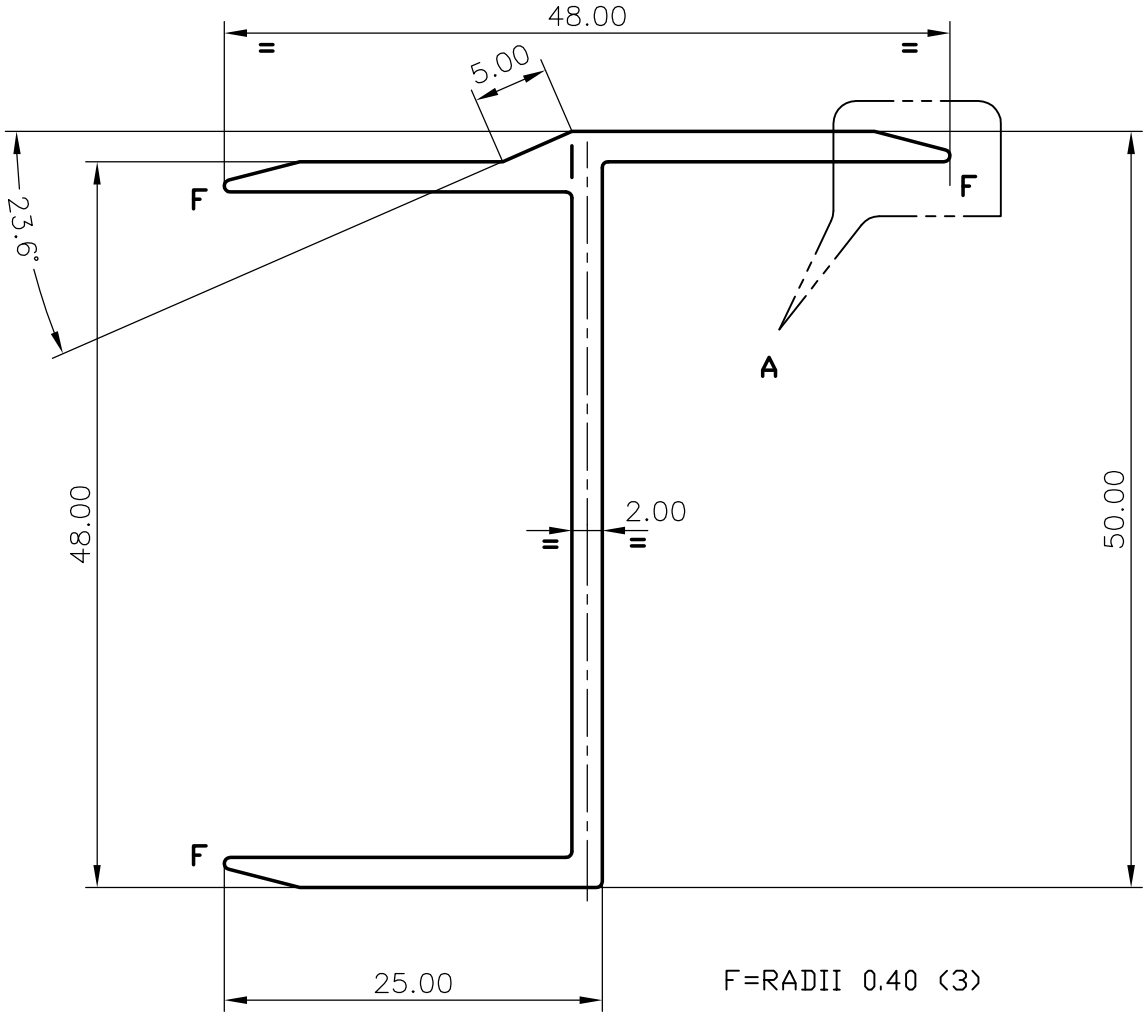

F=RADII 0.40 (3)

GENERAL WALL THICKNESS = 2.00 mm

JINDAL ALUMINIUM LTD.

BANGALORE–560073

1. ALL DIMENSIONS ARE IN mm.
2. ROUND OFF ALL SHARP CORNERS WITH 0.4 mm.
3. TOLERANCES WILL BE AS PER IS:3965–1981 ,UNLESS OTHERWISE SPECIFIED

	NAME	DATE
DRAWN	P,KULKARNI	9–3–99
CHECKED		
APPROVED		

PARTY'S NAME	GENERAL CATEGORY (DELHI MARKET)
PARTY'S DRAWING No.	AS PER SKETCH
ALLOY & TEMPER	HE9 WP
LENGTH	4267 mm. (14')
DESCRIPTION	STRUCTURAL MISCELLANEOUS

SCALE	2:1
WEIGHT kg/m	0.628
SECTION No.	17551
DRAWING No.	17551