P-3607-3	
3971	
17572	

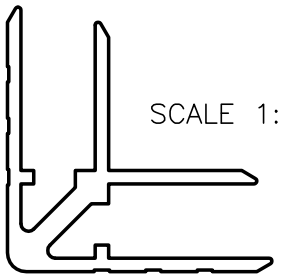

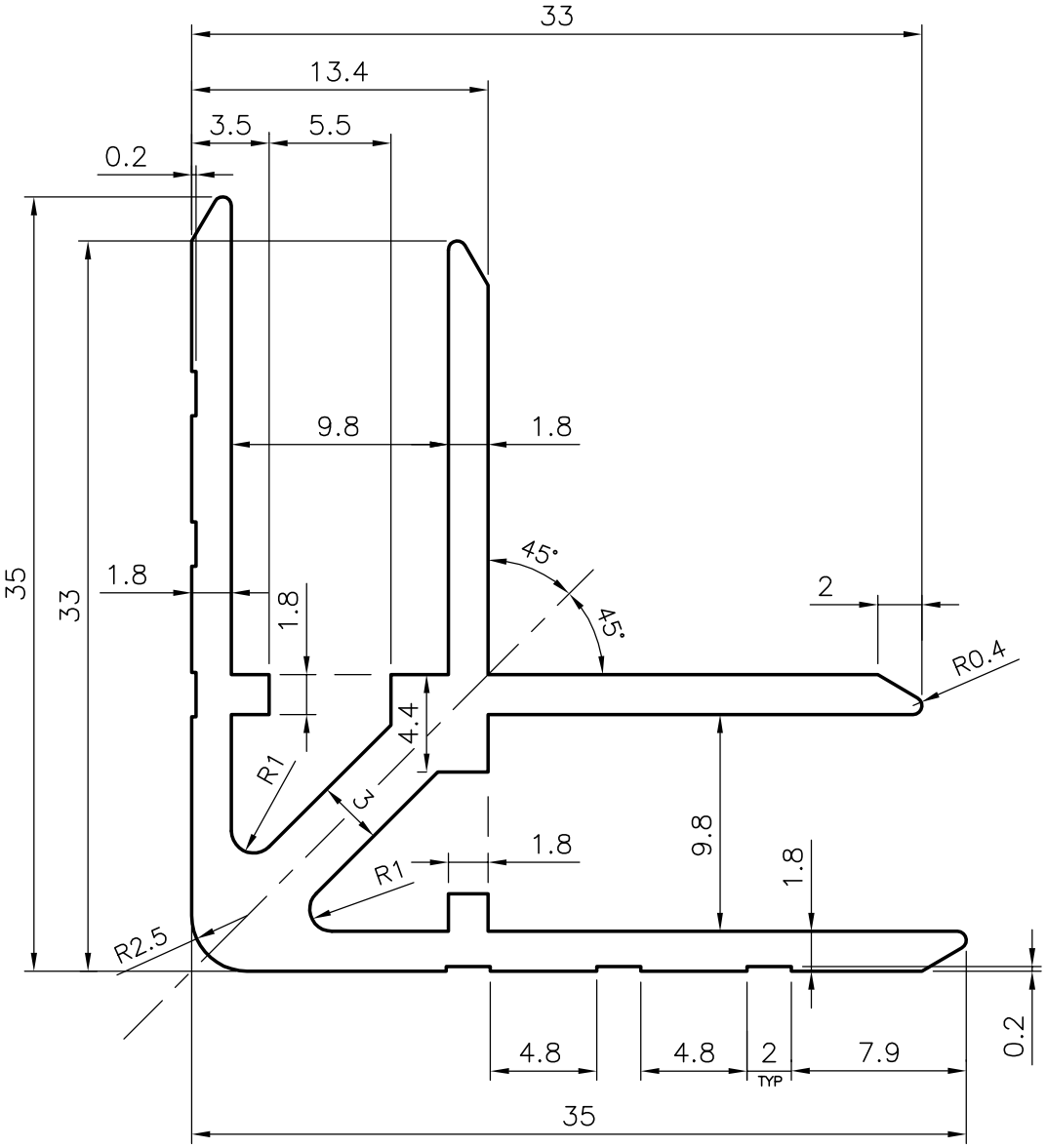

JINDAL SYMBOL OF QUALITY AN ISO 9002 COMPANY	*JINDAL ALUMINIUM LTD.* *BANGALORE-560073 (INDIA)*		NAME	DATE
		DRAWN	RAGHAVENDRA	18-12-01
		CHECKED		
1. ALL DIMENSIONS ARE IN mm. 2. ROUND OFF ALL SHARP CORNERS WITH 0.40 mm. 3. TOLERANCES WILL BE AS PER IS 3965-1981 UNLESS OTHERWISE SPECIFIED		APPROVED		
		SCALE	3:1 & 1:1	
PARTY'S NAME	GENERAL CATEGORY ,. DELHI MARKET	WEIGHT kg/m	0.657	
PARTY'S DRAWING No.	AS PER SAMPLE	PERIMETER	246.79mm	
ALLOY & TEMPER	HE9 WP	SECTION No.	17572	
DESCRIPTION	STRUCTURAL MISC SECTION	DRAWING No.	17572	